O
SL
AL
EA
AC

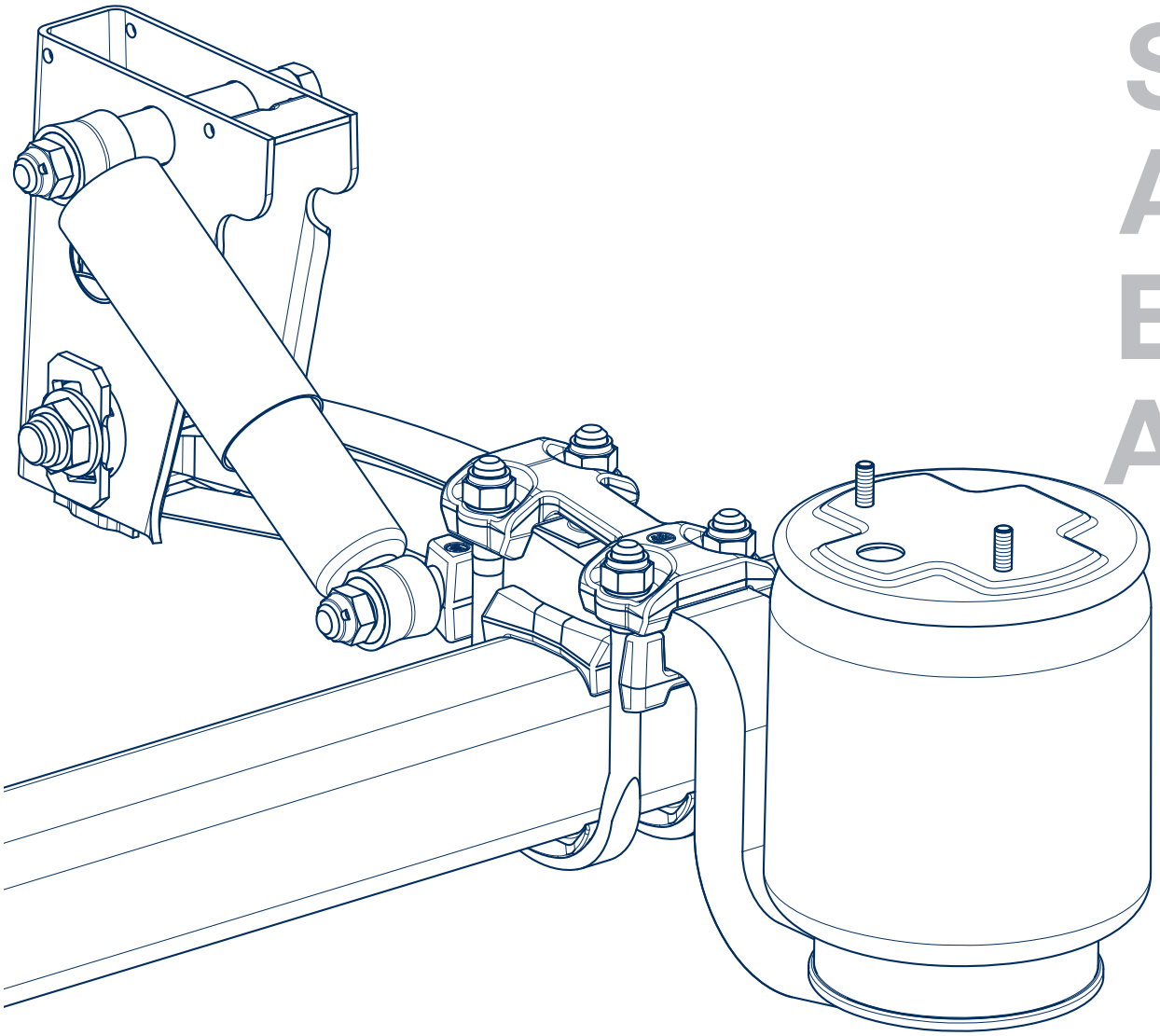

BPW Original spare parts

BPW Air suspension kits
series O.. / SL.. / AL.. / EA.. / AC..

BPW-EL-Luft 31052101e

we think transport

Contents

			Page				
			Air suspension series				
			O	SL	AL	EA	AC
		Explanation of BPW suspension type codes			4 - 5		
		Explanation of BPW code numbers			6 - 7		
◎	1	**Trailing arms**			8 - 23		
	1.1	Straight single leaf trailing arms, 70 mm wide	12 / 13	12 / 13	12 / 13		
	1.2	Cranked single leaf trailing arms, 70 mm wide			14 / 15		
	1.3	Straight single leaf trailing arms, 100 mm wide	16 / 17	16 / 17	16 / 17		
	1.4	Cranked single leaf trailing arms, 100 mm wide	18 / 19	18 / 19	18 / 19		
	1.5	Straight double leaf trailing arms	20 / 21	20 / 21	-		
	1.6	Cranked double leaf trailing arms	22 / 23	22 / 23	-		
◎	2	**Axle plates, spring seat arrangements**			24 - 57		
	2.1	Spring seat arrangements, welded	26 - 29	26 - 29	26 - 29		
	2.2	Clamped spring seat arrangements	-	30 - 33	30 - 33		
	2.3	Segments, spring plates	34 - 47	34 - 47	34 - 47		
	2.4	Centering bolts, tracking plates	48 / 49	48 / 49	48 / 49		
	2.5	U-bolts	50 - 54	50 - 54	50 - 54		
	2.6	Assembly instructions for clamped spring seat arrangements	-	56 - 57	56 - 57		
◎	3	**Spring pivot bolt bearings**			58 - 69		
	3.1	Spare parts for spring pivot bolt bearings	60 - 65	60 - 65	60 - 65		
	3.2	Repair kits for spring pivot bolt bearings	66 - 69	66 - 69	66 - 69		
◎	4	**BPW air bags**			70 - 87		
	4.1	Air bags complete	74 - 79	74 - 79	74 - 79	74 - 79	74 - 79
	4.2	Conversion from air bags to GRP piston	80 / 81	80 / 81	80 / 81		80 / 81
	4.3	Spare parts for air bags	82 - 85	82 - 85	82 - 85	82 - 85	82 - 85
	4.4	Upper air bag attachments / packers	86 / 87	86 / 87	86 / 87	86 / 87	86 / 87
◎	5	**BPW Shock absorbers**			88 - 101		
	5.1	Shock absorber	90 / 91	90 / 91	90 / 91	90 / 91	90 / 91
	5.2	Spare parts for shock absorbers	92	92	92		
	5.3	Upper shock absorber attachments	93 - 96	93 - 96	93 - 96		
	5.4	Lower shock absorber attachments	97 - 101	97 - 101	97 - 101		100 - 101
◎	6	**BPW Catch straps**			102 / 103		
	6.1	Check straps	102	102	102		
	6.2	Catch strap attachments	103	103	103		
◎	7	**BPW Air suspension hanger brackets, channel cross member**			104 - 119		
	7.1	Hanger brackets	108 - 115	108 - 115	108 - 115		
	7.2	Spare parts for hanger brackets, channel cross member and frames	116 - 119	116 - 119	116 - 119		
◎	8	**U-stabilizers**			120		
◎	9	**Air reservoirs**			121		
◎	10	**BPW Axle lift devices**			122 - 139		
	10.1	Sidewise mounted axle lifts	124 - 127	124 - 127	124 - 127		
	10.2	Central mounted axle lifts	128 - 131	128 - 131	128 - 131		
	10.3	Two-sided axle lifts	132 - 139	132 - 139	132 - 139		
◎	11	**BPW ECO Air running gear systems**			140 - 145		
	11.1	Spare parts				140 - 143	
	11.2	Two-sided lift				144	
	11.3	Side mounted axle lift				145	
	11.4	Central mounted axle lift				146	
◎	12	**BPW ECO Air COMPACT running gear systems**			148 - 154		
	12.1	Spare parts					148 - 151
	12.2	Two-sided lift					152
	12.3	Side mounted axle lift					153
	12.4	Central mounted axle lift					154

Version: **01.03.2021** Subject to change (without notice).

This list shows original spare parts for BPW air suspension kits of the This spare parts list shows fast moving parts for air suspension bogies for series **O.. O.. / SL.. / AL.. 6 - 13t** and **ECO Air (EA) and ECO Air COMPACT (AC)**.

For further spare parts see BPW spare parts catalogue and / or spare parts lists of the corresponding single axles without suspension parts. Current versions and additional information can be found online at: www.bpw.de.

3 / 4

parts are embossed with BPW code number.

Contents (exploded view)

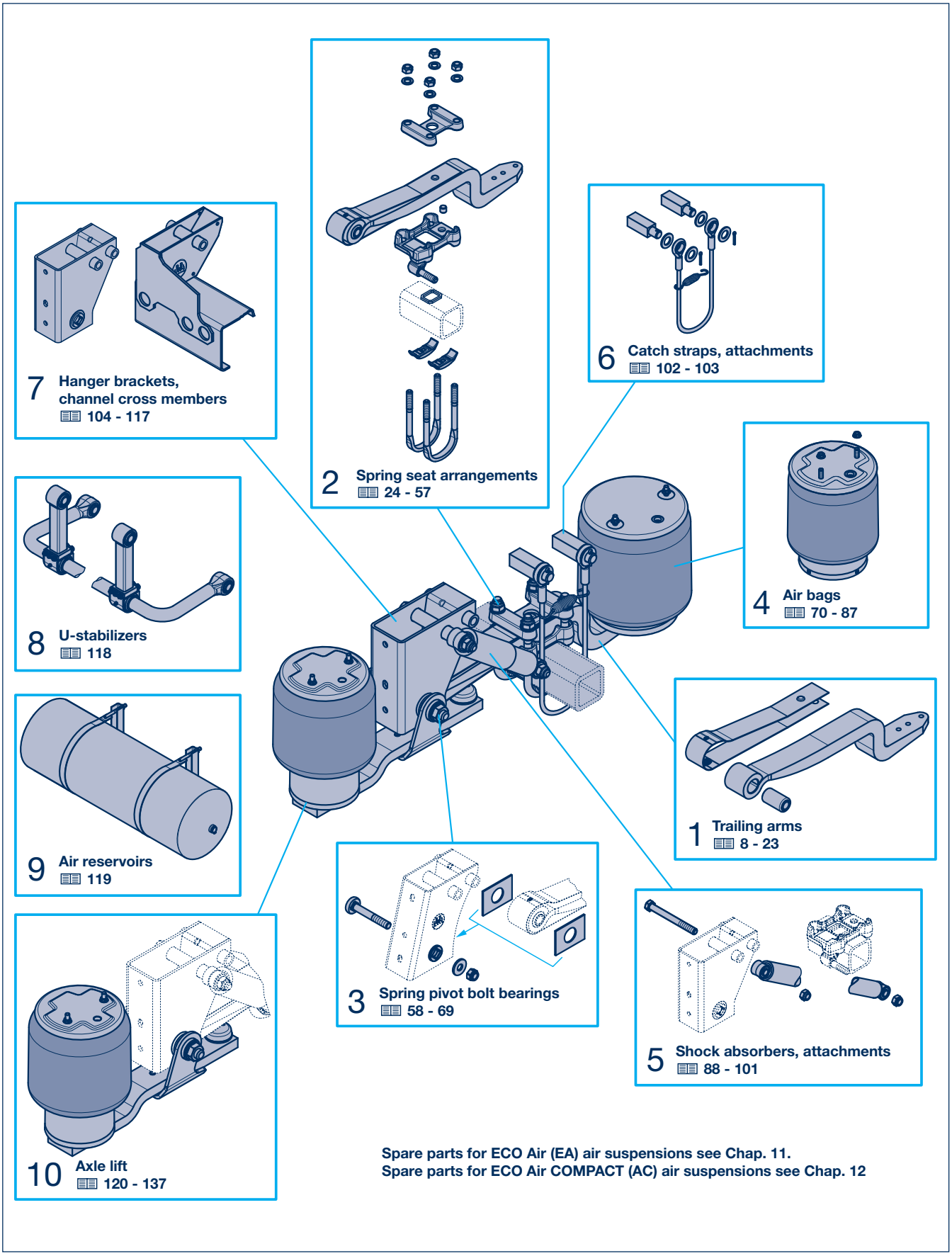

Spare parts for ECO Air (EA) air suspensions see Chap. 11.
Spare parts for ECO Air COMPACT (AC) air suspensions see Chap. 12

2 Explanation of BPW suspension type codes

2.2 Air suspensions (extract)

Example:

HSF	ALO	A	LL	3/	9010	/12°	E	F30	ECO Plus 2

H..	See explanation of axle types
K..	
N..	
a.o.	

	Air suspension series		Nominal ride height
O	O	Straight overslung trailing arms	490 - 500
OM	OM	Cranked overslung trailing arms	370 - 470
OMN	OMN	Cranked overslung trailing arms	355
OMT	OMT	Cranked underslung trailing arms	290
OT	OT	Underslung trailing arms	220 - 360
SLO	SLO	Straight overslung trailing arms	420 - 490
SLM	SLM	Cranked overslung trailing arms	360 - 440
SLU	SLU	Underslung trailing arms	220 - 330
ALO	ALO	Straight overslung trailing arms	380 - 490
ALM	ALM	Cranked overslung trailing arms	305 - 420
ALMT	ALMT	Cranked overslung trailing arms	245 - 290
ALU	ALU	Underslung trailing arms	175 - 300
DLU	DLU	Direct air suspension	260 - 330
EAAU	EAAU	ECO Air	205 - 350
EAAM	EAAM		245 - 370
EAAO	EAAO		335 - 385
EABU	EABU		260 - 330
EABM	EABM		300 - 425
EABO	EABO		330 - 510
ACAU	ACAU	ECO Air COMPACT	205 - 350
ACAM	ACAM		245 - 370
ACAO	ACAO		335 - 385
ACBU	ACBU		260 - 330
ACBM	ACBM		300 - 425
ACBO	ACBO		330 - 510
AC..HD	AC..HD	ECO Air COMPACT **HD**	

A	With axle lift device
R	With auxiliary frame (= FH + 100 mm)
U	With U-stabilizer

L	With steering axle, series **L**	steering angle max. 40°
LL	With self-steering axle, series **LL**	steering angle max. 27°

-	Single axle
2/	Tandem axle suspension
3/	Tri-axle suspension

6006 to 13010	Axle load (kg) + quantity of wheel studs per hub

/12° to /40°	Steering angle of steering axle

Explanation of BPW suspension type codes 2

Air suspensions (extract) 2.2

Example:

HSF	ALO	A	LL	3/	9010	/12°	E	F30	ECO Plus 2

			Hanger bracket version
A			Alloy hanger brackets
C			Channel cross member
D			Hanger brackets with top plate
E			Hanger brackets without top plate
K			Bolted on hanger brackets
S			Taper mounted hanger brackets (70 mm wide)
T			with member (trailing axle)
V			Adjustable hanger brackets
X			With stainless steel hanger brackets
Y			Without mounted hanger brackets, hanger brackets separate
			Air bag versions
	30		Air bag Ø 300 mm, for stroke 200 mm (standard)
	30-1		Ø 300 mm, for stroke to 340 mm
	30 K		Ø 300 mm, for stroke 150 mm
	36		Ø 360 mm, for stroke 200 mm (standard)
	36-1		Ø 360 mm, for stroke to 340 mm
	36-2		Ø 360 mm, for stroke to 450 mm
	36 K		Ø 360 mm, for stroke 180 mm
	F30		Ø 300 mm, central on the trailing arm
	G		Air bags with split piston
	Z		Air bags loose, separate
			Hub bearing versions
		ECO	Trailer axle with ECO Unit, 1996 (1998) -
		ECO-MAXX	Weight optimised trailer axle with ECO Unit, - 2003
		ECO^{Plus}	Weight-optimised trailer axle with ECO^{Plus} Unit, 2003 -
		ECO Plus 2	Trailer axle with ECO Plus 2 Unit, 2007 -
		ECO Plus 3	Trailer axle with ECO Plus 3 Unit, 2015 -
		MAXX	Weight-optimized trailer axle with conventional hub bearing

3 Explanation of BPW code numbers

3.1 Axles and suspensions (extract)

O
SL
AL
EA
AC

Example:

30.	38.	743.	000
61.	38.	441.	001

		1st + 2nd digit	Wheel brake	
		Suspension version	Brake drum	Washer
21.		Air suspension single axle	All	-
28.		Air suspension single axle	All	All
30.		Air suspension single axle	All	-
32.		Twin or tri-axle suspension	All	-
38.		Air suspension single axle without air bags, air bags loose, separate	All	-
39.		Tri-axle air suspension / Twin or tri-axle suspension	All	Ø 430
61.		Air suspension single axle	SN 420	Ø 430
62.		Tandem axle air suspension	SN 420	Ø 430
63.		Tri-axle air suspension	SN 420	Ø 430
64.		Air suspension single axle	SN 360	Ø 370
65.		Tandem axle air suspension	SN 360	Ø 370
66.		Tri-axle air suspension	SN 360	Ø 370
67.		Air suspension single axle	SN 300	-
68.		Tandem axle air suspension	SN 300	-
69.		Tri-axle air suspension	SN 300	-
70.		Consecutively generated axle or suspension number according to configuration in the BPW product configurator		
71.		Module without hanger bracket and bellows (ECO Air / ECO Air COMPACT)	SN 420	Ø 430
74.			SN 360	Ø 370
77.			SN 300	-
72.		Module with hanger bracket, without bellows (ECO Air / ECO Air COMPACT)	SN 420	Ø 430
75.			SN 360	Ø 370
78.			SN 300	-
73.		Module with hanger bracket and bellows + multi-axle (ECO Air / ECO Air COMPACT)	SN 420	Ø 430
76.			SN 360	Ø 370
79.			SN 300	-
98.		Suspension part set, air suspension without axles		
99.		Suspension part set, air suspension without axles		

		3rd + 4th digit			
		Axle load	Roller bearing	Year of manufacture	Remark
06.		6500 kg	33116 / 32310	1982 -	Conventional hub bearing
08. 09.		8000 - 9000 kg	33116 / 32310	1982 -	
10.		10000 - 12000 kg	33118 / 33213	1982 -	
14.		13000 - 14000 kg	32219 / 33215	1983 -	
36.		6500 kg	33116 / 32310	1991 (1992) -	ECO / ECO-MAXX Unit
37. 38. 39.		8000 - 9000 kg	33116 / 32310	1991 (1992) -	
40. 41.		10000 - 12000 kg	33118 / 33213	1991 (1992) -	
44.		13000 - 14000 kg	32219 / 33215	1994 -	
48. 49.		8000 - 9000 kg	33118 / 33213	2000 -	ECO^{Plus} Unit
50. 51.		10000 - 12000 kg	33118 / 33213	2000 -	
56.		6500 / 7000 kg	33118 / 33213	2007 -	ECO Plus 2 Unit
57. 58. 59.		8000 - 9000 kg	33118 / 33213	2007 -	
65.		6400 kg 6500 kg	33215 / 32310 33215 / 32310	1985 - 1980 - 1982	Conventional hub bearing
66.		6500 kg	33118 / 33213	2015 -	ECO Plus 3 Unit
68.		9000 kg	33118 / 33213	2015 -	

Explanation of BPW code numbers 3

Axles and suspensions (extract) 3.1

Example:

30.	**38.**	**743.**	**000**	
61.	**38.**	**441.**	**001**	

		5th + 6th digit (code number range 7...)	**Version**
01.		Designation for trailing arm and air bag beam (ECO Air and ECO Air COMPACT)	**EAAU / ACAU**
02.			**EAAM / ACAM**
03.			**EABM / ACBM**
04.			**EABO / ACBO**
05.			**EABU / ACBU**
06.			**EAAO / ACAO**
		5th - 7th digit (code number range 2... / 3... / 6...)	
001. to 099.		**Premounted air suspension axle without hanger brackets and air bags** for BPW code numbers 61.xx.**xxx**.xxx - 69.xx.**xxx**.xxx e.g. .**0**xx. = Premounted air suspension axle .x**51**. = Premounted air suspension axle with trailing arm 05.082.13.**51**.0	
220. to 509.		**Designation of ride height and air bag type 220 to 509** for BPW code number 61.xx.**xxx**.xxx - 69.xx.**xxx**.xxx e.g. .**22**x. = 220 mm ride height .**44**x. = 440 mm ride height **Air bag version:** .xx**0**. = BPW 30 (Ø 300 mm) .xx**1**. = BPW 36 (Ø 360 mm) .xx**2**. = BPW 36-1 (Ø 360 mm) .xx**3**. = BPW 30-1 (Ø 300 mm) .xx**4**. = BPW 30 K (Ø 300 mm) .xx**5**. = BPW 36 K (Ø 360 mm) .xx**6**. = BPW 36-2 (Ø 360 mm) .xx**9**. = BPW 30 / 36 loose separately	
501. to 839.		**Designation of wheel brake for code numbers 20. - 39...** For explanation of code numbers, see EL-HKN / EL-SB / EL-TS2/TSB	
		7th - 10th digit (code number range 7... + ECO Plus 3)	
	0000	**Consecutive number 0000 - 9999**	
		8th - 10th digit (code number range 2... / 3... / 6...)	
	000	**Consecutive number 000 - 999**	

1 Trailing arms

General

O

SL

AL

BPW trailing arms

The trailing arm connects the axle to the vehicle frame via air suspension hanger brackets and the air bag.

BPW trailing arms (single or twin leaf) are highly flexible spring steel elements. They are hot-rolled from one piece, after which they are shot-peened and CDP_{ZN}-coated.

Trailing arms largely absorb the bending moments and reduce the torsional forces input into the axle beam.

Various trailing arm versions permit optimisation of axle load , track, spring centre, centre of gravity height and driving comfort.

In every situation their stiffness and flexibility are exactly matched to the vehicle and its application.

This reduces the stress on the body and ensures that the vehicle achieves a long service life.

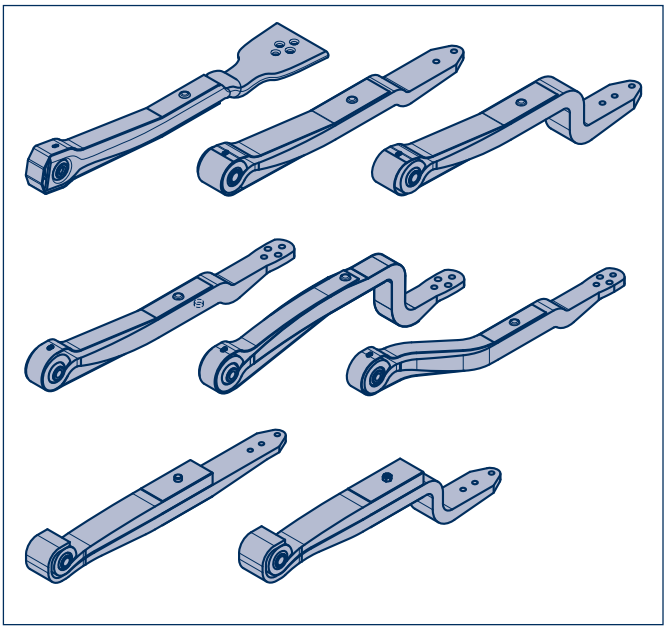

If single leaf trailing arms are used the locking plate offers the necessary safety reserves if the worst should come to the worst.

Long-life steel / rubber / steel bushes (up to 4 times the service life of rubber / steel bushes) offer maintenance-free mounting of the trailing arm.

The axle is precisely located, and tyre wear and operational costs are both reduced.

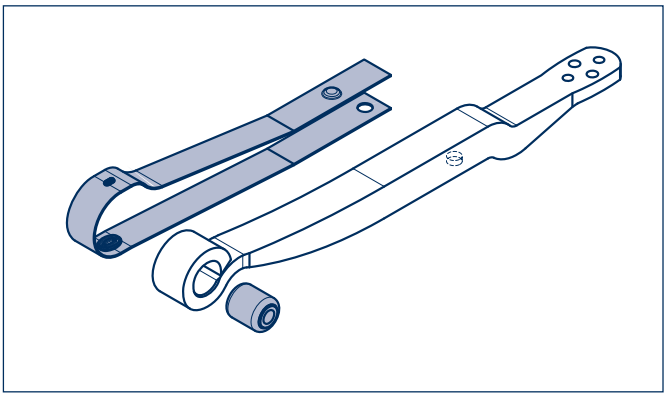

Spare parts for ECO Air (EA) air suspensions see Chap. 11.

Spare parts for ECO Air COMPACT (AC) air suspensions see Chap. 12.

Trailing arms 1

General

Conversion of spring bolts

As part of introducing new products into series production, the spring bolt gland on all Airlight II air suspensions systems was changed from **M 30** to **M 24** from September 2007 onwards.

Introducing a more elastic **M 24** spring bolt gland provides greater security due to higher bolt tension being achieved.

This means the bolted connection has been made even less susceptible to settling.

In addition, **M 24** spring bolts are Geomet coated. This eliminates the need for additional lubrication.

This modification affects all air suspension systems with 70 mm wide trailing arms (all Airlight II versions).

All the versions were converted to **M 24** at the start of series production from week 36 / 2007 onwards. Versions with **M 30** spring bolts were not produced from that point onwards.

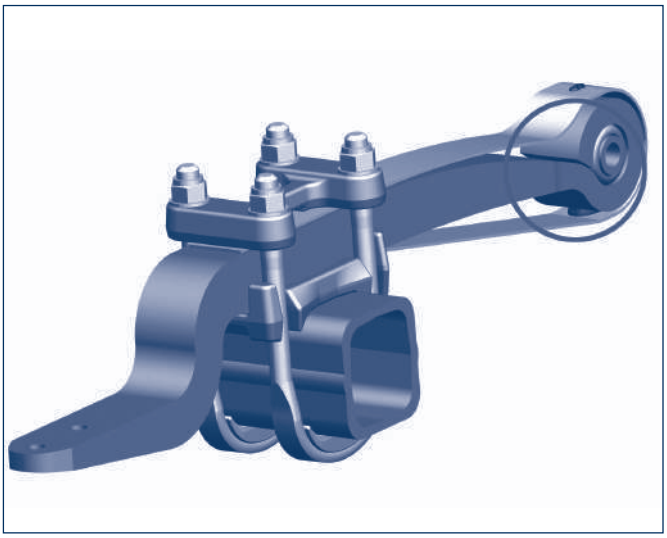

The adaptation to **M 24** spring bolts is performed by changing the spring pivot bolt assemblies, the bushes in the air suspension hanger brackets and channel cross members and the steel / rubber / steel bushes in the trailing arms.

The geometry of the actual trailing arm is not changed. As an assembly, the trailing arms with steel / rubber / steel bushes for **M 24** spring bolts are given the index 2 (example: trailing arm 05.082.13.88.0 for **M 30** spring bolt => trailing arm 05.082.13.88.2 for **M 24** spring bolt).

It is possible to adapt from the **M 30** spring bolt to the **M 24** spring bolt by changing the steel / rubber / steel bush.

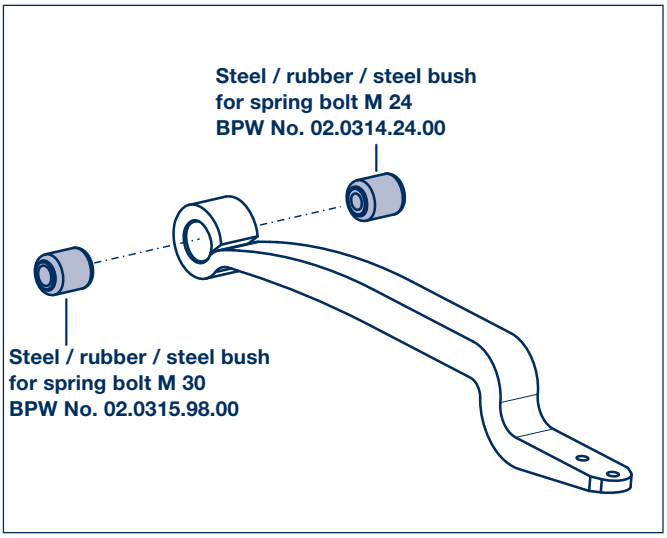

With all SL air suspensions, the spring bolt gland will be successively changed over from **M 30** to **M 30 x 2** from spring 2019 onwards.

The introduction of a **M 30 x 2** spring bolt causes the preload to increase while the tightening torque remains constant.

SL versions with **M 30** spring bolts were not produced from that time onwards.

The conversion to the new spring bolts **M 30 x 2** is achieved by means of a modified or new spring bolt part groups incl. new nuts.

1 Trailing arms

General

O

SL

AL

Optimised trailing arm and air bag attachment

As part of a further development of the Airlight II air suspension, BPW introduced new optimised trailing arms from 01 July 2010, as well as a centrally bolted air bag BPW 30 / 30 K for offset V = 20 mm.

A four-hole pattern was drilled into the new trailing arm and the air bag was bolted directly onto the trailing arm with a single bolt.

In addition to the new centrally bolted air bag, the familiar air bags BPW 30 / 30 K and BPW 36 / 36 K / 36-1 can continue to be attached using a steel plate and different offsets.

Note: Please note that the new air bag can only be combined with the new trailing arm.

The bolt/hole diameters prevent the new air bag from being attached to an old trailing arm by mistake.

From a technical point of view, there are no restrictions for using both versions on the same axle or vehicle.

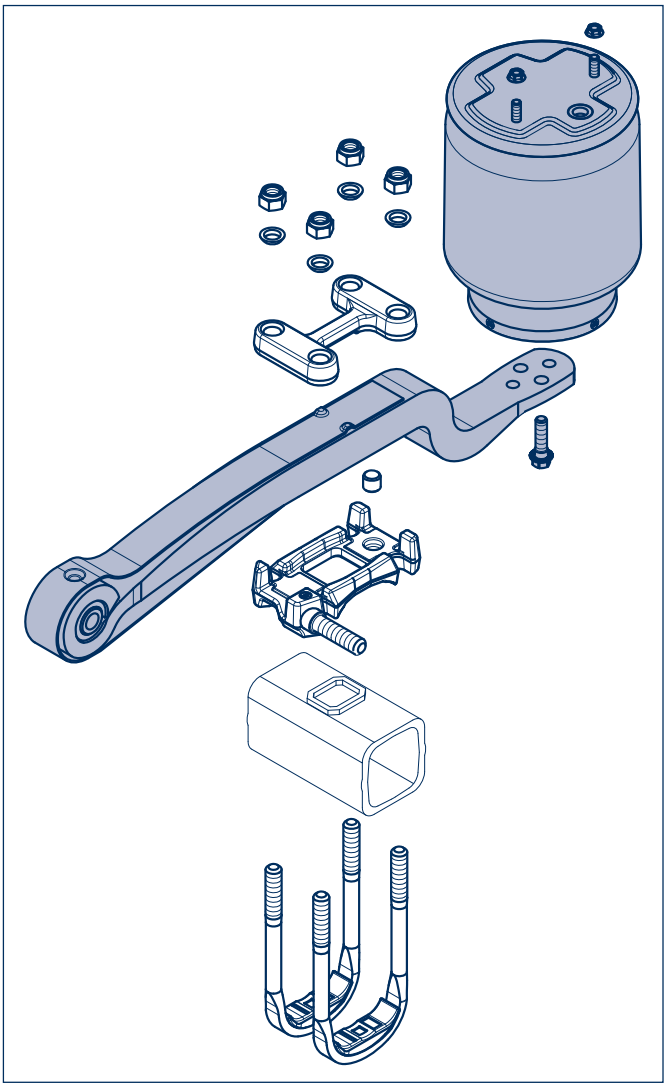

Old version	New version
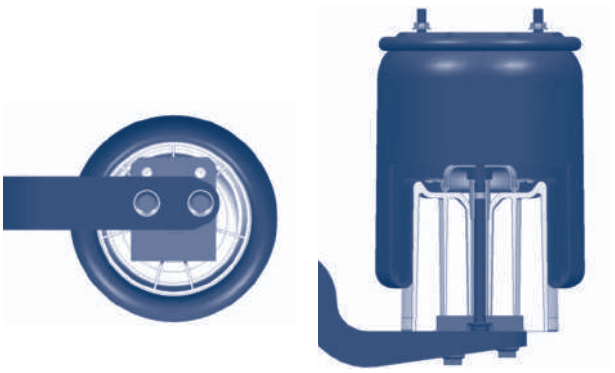	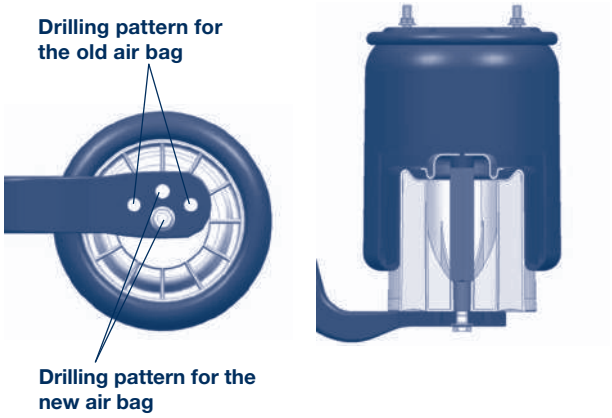

Trailing arms 1

General

Determining replacement trailing arms

The BPW code number is embossed into the underside of the trailing arm (around the air bag screwed joint) or around the rolled-in spring eye of the trailing arm.

If this identification is missing or no longer legible, the particular type of trailing arm can be determined based on the shape and the dimensions.

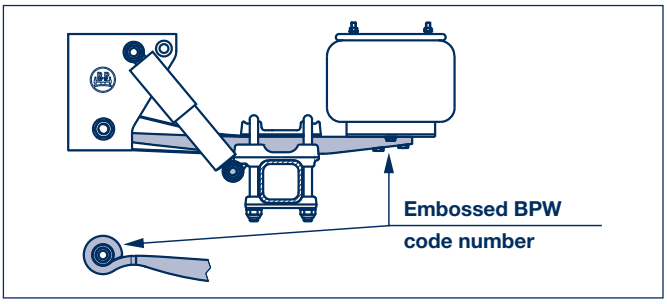

1. Clarifying the version

- Single leaf, 3D trailing arm or double leaf trailing arm
- Spring bolt **Ø 24** or **Ø 30**
- Note the position of the spring bolt in double leaf trailing arms
- Measure the thickness (**D**) of the trailing arm and the width (**B**)
- Determine the offset (**K**) and the shape (**BH**)
- Measure dimension **L1** (middle of spring bolt to middle of axle)
- Measure dimensions **L2** to **L5**

Trailing arms with rubber / steel bushes fitted are no longer available. If there is a requirement for replacing them, change to trailing arms with steel / rubber / steel bushes!

Rubber / steel bushes cannot be replaced by steel / rubber / steel bushes!

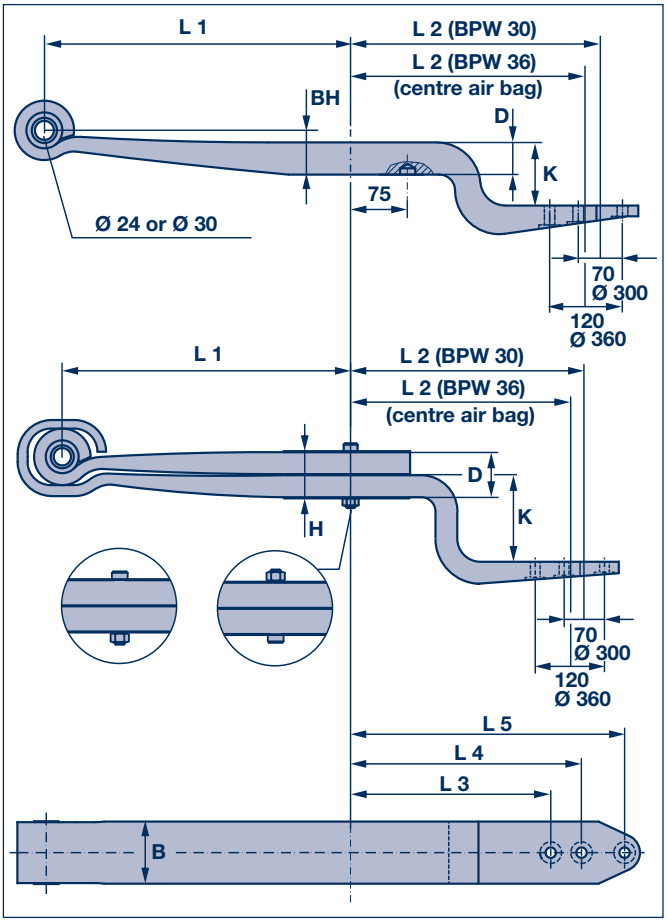

Trailing arms with catch plate fitted (secured by a centre bolt) are replaced by trailing arms with a loose catch plate.

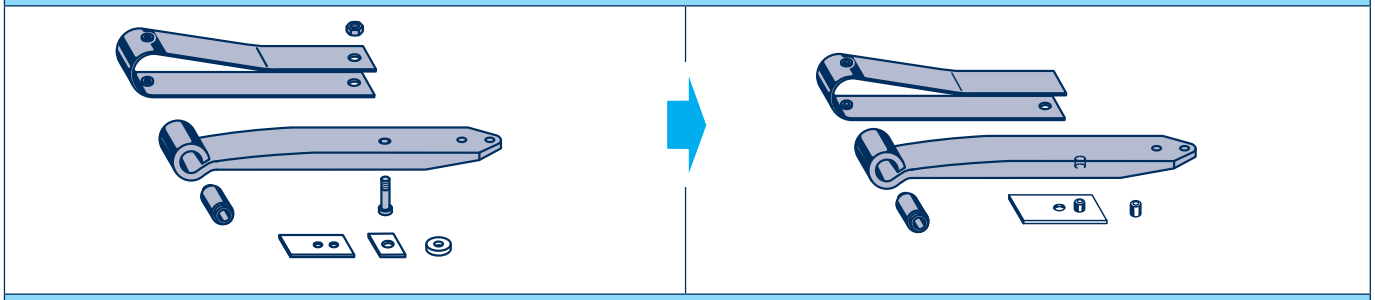

When changing to trailing arms with loose catch plate, use tracking plate or pin. See also Chap. 2.4.

1 Trailing arms

1.1 Straight single leaf trailing arms, 70 mm wide

AL

Straight single leaf trailing arms, 70 mm wide (B)

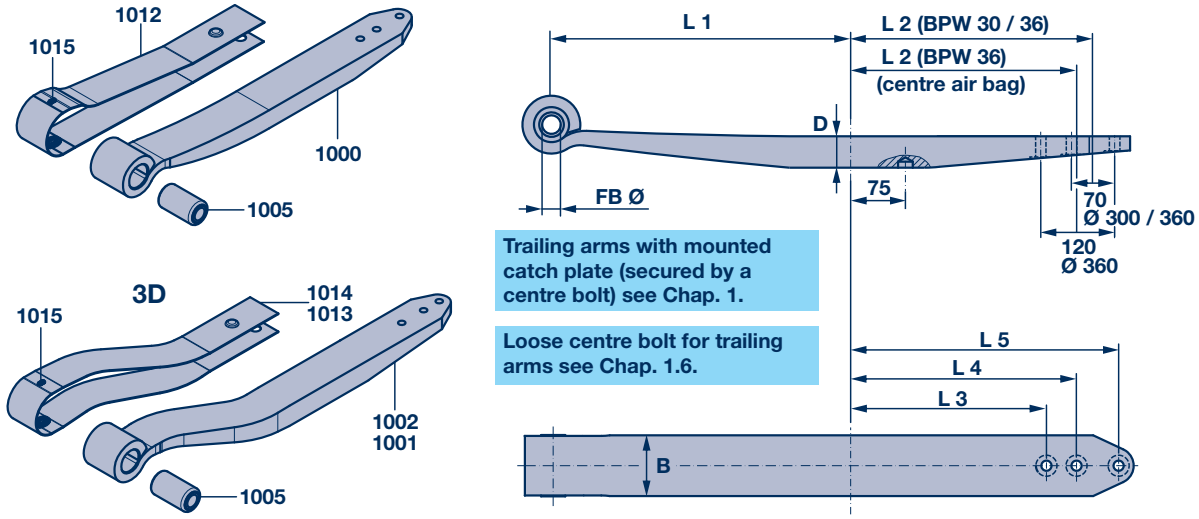

Trailing arms with mounted catch plate (secured by a centre bolt) see Chap. 1.

Loose centre bolt for trailing arms see Chap. 1.

A 1

A 2

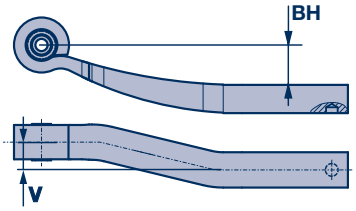

A 3

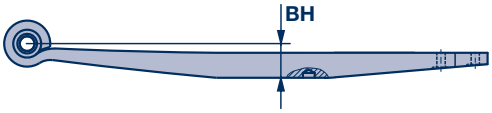

A 4

A 5

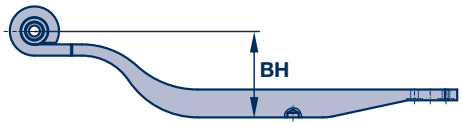

A 6

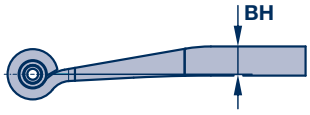

Trailing arms 1

Straight single leaf trailing arms, 70 mm wide 1.1

AL

Straight single leaf trailing arms, 70 mm wide (B)

Fig.	Dimension D	BH	L 1	BPW 36 BPW 30 L 2	L 3	L 4	L 5	V	L	FB Ø	BPW code no.: Trailing arm Item 1000 Item 1001 / 1002 3D	Suitable catch plate Item 1012 Item 1013 / 1014 3D
A 1	1 x 53	79	500	-	-	-	-	-	-	30	05.082.14.03.0	05.348.30.57.0
										24	**05.082.14.03.2**	
A 2	1 x 56	79	500	-	-	-	-	55	-	30	05.082.14.11.0 L 05.082.14.10.0 R	05.348.30.51.0 L 05.348.30.50.0 R
										24	**05.082.14.11.2 L** **05.082.14.10.2 R**	
A 3	1 x 62	80	550	310	-	275	345	-	895	30	05.082.14.22.0	05.348.30.54.0
										24	**05.082.14.22.2**	
A 4			500	160	-	130	190	-	690	24	05.082.14.28.2	05.348.30.58.0
A 5		192	500	380	-	345	415	-	915	24	05.082.14.32.2	05.348.30.89.0
	1 x 65	192	500	380	-	345	415	-	915	24	05.082.14.58.2	05.348.30.89.0
A 6	1 x 65		500	-	-	-	-	-	-	24	05.082.14.51.2	05.348.30.91.0

L = Left side

R = Right side

Item	Designation	BPW code no.:	Dimension	Remark
1005	Bush (steel / rubber / steel)	02.0315.98.00 02.0314.24.00	**Ø 30** / 60 x 72 **Ø 24** / 60 x 72	for 70 mm wide trailing arm
		02.0314.51.00	**Ø 24** / 60 x 72	for 70 mm wide trailing arm LightTube
1015	Rubber plugs for catch plate	03.379.00.27.0		

* for steering axle

[1] for old trailing arms with rubber / steel bush

Loose centre bolt for trailing arms see Chap. 1.6.

1 Trailing arms

1.2 Cranked single leaf trailing arms, 70 mm wide

AL

Cranked single leaf trailing arms, 70 mm wide (B)

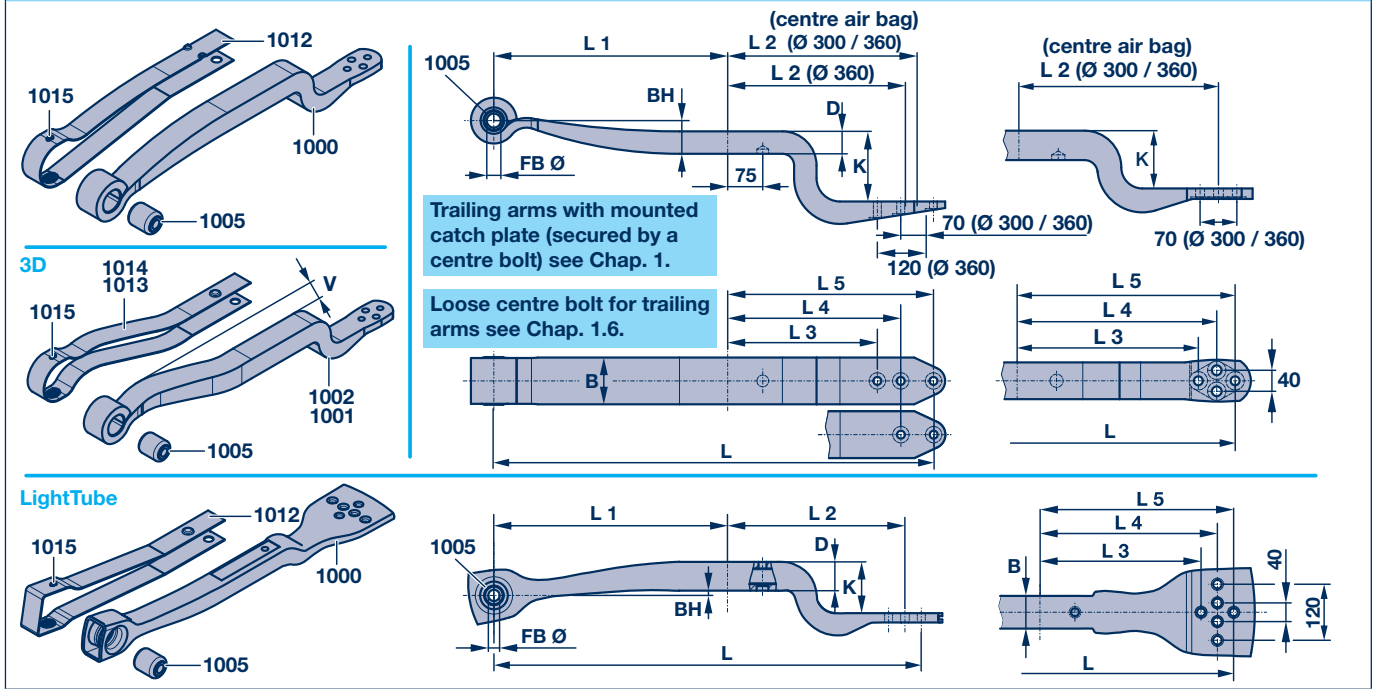

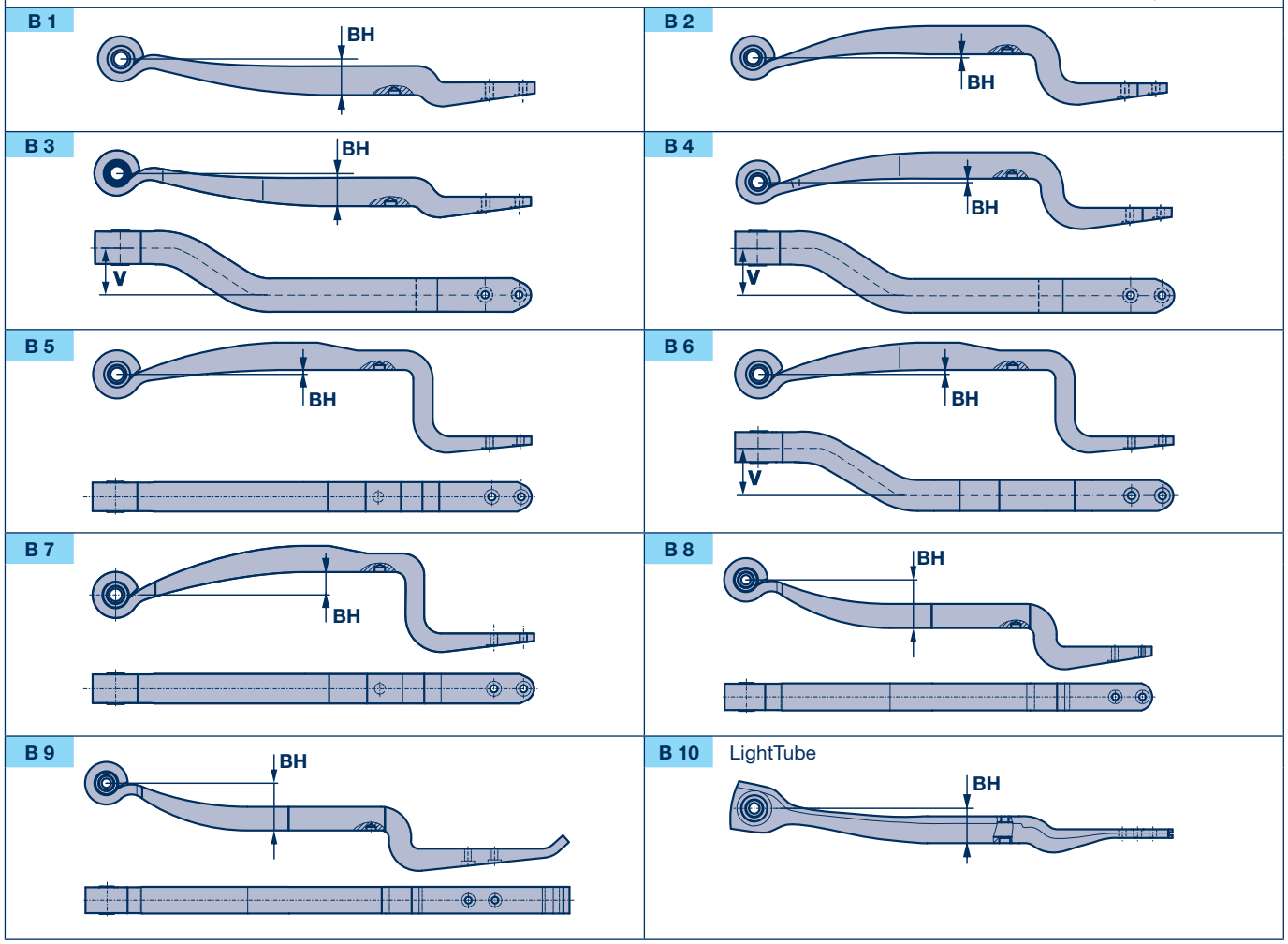

Bushes, rubber plugs for catch plate see Chap. 1.1.

Trailing arms 1

Cranked single leaf trailing arms, 70 mm wide 1.2

AL

Cranked single leaf trailing arms, 70 mm wide (B)

	Dimension											BPW code no.:	
Fig.	K	D	BH	L 1	BPW 36 BPW 30 L 2	L 3	L 4	L 5	V	L	FB Ø	Trailing arm Item 1000 Item 1001 / 1002 3D	Suitable catch plate Item 1012 Item 1013 / 1014 3D
B 1	**13**	1 x 65	62	500	380/405	345	415	465	-	965	24	05.082.14.35.2	05.348.30.91.0
B 1	**30**	1 x 56	80	500	310	275	310	345	-	845	30	05.082.13.90.0	05.348.30.36.0
											24	05.082.13.90.2	05.348.30.36.0
B 10		1 x 61.5										05.082.14.57.2	05.348.30.93.0
B 1		1 x 56	80		380	345	380	415	-	915	30	05.082.13.89.0	05.348.30.36.0
											24	05.082.13.89.2	05.348.30.36.0
B 10		1 x 61.5										05.082.14.56.2	05.348.30.93.0
B 1		1 x 62	80		310	275	310	345	-	845	30	05.082.14.02.0	05.348.30.36.0
B 1											**24**	**05.082.14.02.2**	
B 3									110	845	30	05.082.14.23.0 L 05.082.14.24.0 R	05.348.30.40.0 R 05.348.30.41.0 L
											24	**05.082.14.23.2 L** **05.082.14.24.2 R**	
B 1					380	-	345	415	-	915	30	05.082.13.96.0	05.348.30.36.0
											24	**05.082.13.96.2**	
B 3									110	915	30	05.082.13.94.1 L 05.082.13.93.1 R	05.348.30.40.0 R 05.348.30.41.0 L
											24	**05.082.13.94.2 L** **05.082.13.93.2 R**	
B 1		1 x 65	80		310	-	275	345		845	24	05.082.14.34.2	05.348.30.36.0
					380/405	345	380	415	-	965	24	05.082.14.43.2	
B 3									110	965	24	05.082.14.45.2 L 05.082.14.46.2 R	05.348.30.40.0 R 05.348.30.41.0 L
B 1			15		385/410	350	420	470	-	970	24	05.082.14.49.2	05.348.30.91.0
B 2	**110**	1 x 56	10	500	380	345	380	415	-	915	30	05.082.13.88.0	05.348.30.37.0
											24	05.082.13.88.2	05.348.30.37.0
B 10		1 x 61.5									24	05.082.14.55.2	05.348.30.92.0
B 2		1 x 62									30	05.082.13.95.0	05.348.30.37.0
											24	**05.082.13.95.2**	
B 4						-	345	415	110	915	30	05.082.13.92.1 L 05.082.13.91.1 R	05.348.30.38.0 R 05.348.30.39.0 L
											24	**05.082.13.92.2 L** **05.082.13.91.2 R**	
B 8			62	620	365	-	330	400	-	1020	24	05.082.14.39.2	05.348.30.90.0
B 9											24	05.082.14.40.2	
B 2		1 x 65	10	500	380/405	345	415	465	-	965	24	05.082.14.44.2	05.348.30.37.0
B 4									110		24	05.082.14.47.2 L 05.082.14.48.2 R	05.348.30.38.0 R 05.348.30.39.0 L
B 5	**170**	1 x 56	80	500	380	-	345	415	-	915	30	05.082.14.17.0	05.348.30.49.0
											24	**05.082.14.17.2**	
B 2	**185**		10								30	05.082.14.01.0	05.348.30.37.0
		1 x 62									30	05.082.14.04.0	
B 7	**189**		54	550	380	345	380	415	-	965	30	05.082.14.25.0	05.348.30.55.0
											24	**05.082.14.25.2**	
B 5	**195**	1 x 56	10	500	380	-	345	415	-	915	30	05.082.14.09.0	05.348.30.49.0
											24	**05.082.14.09.2**	
B 5		1 x 62	10	500	380	345	380	415	-	915	30	05.082.14.12.0	05.348.30.49.0
											24	**05.082.14.12.2**	
B 6									110		30	05.082.14.13.0 L 05.082.14.14.0 R	05.348.30.52.0 R 05.348.30.53.0 L
											24	**05.082.14.13.2 L** **05.082.14.14.2 R**	
B 2	**205**	1 x 60	54	550	380		345	415	-	965	30	05.082.14.08.0	05.348.30.48.0

L = Left side
R = Right side

1 Trailing arms

1.3 Straight single leaf trailing arms, 100 mm wide

O
SL
AL

Straight single leaf trailing arms

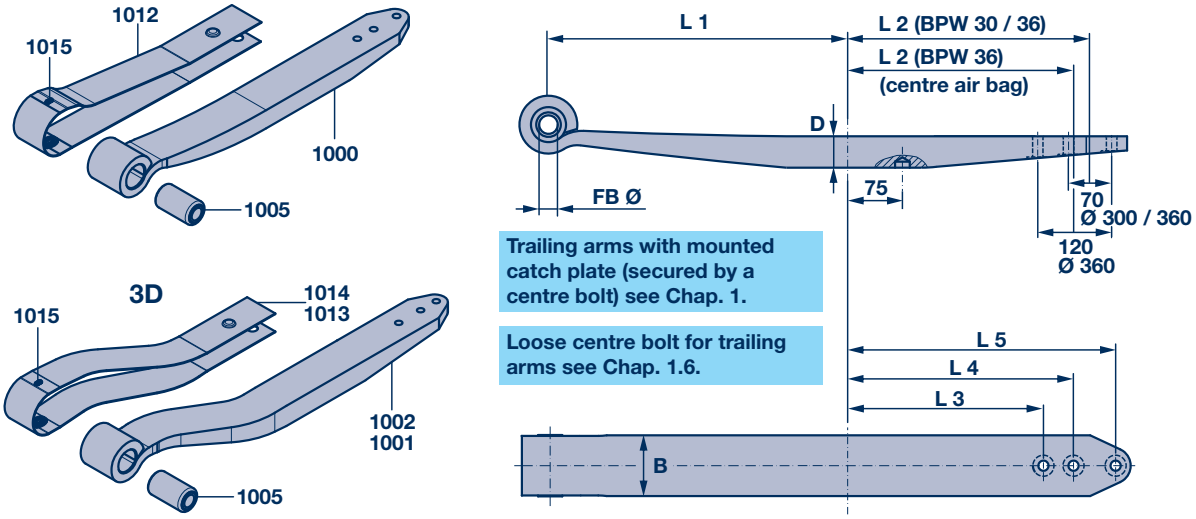

A 1

A 2

A 3

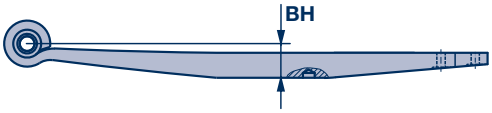

A 4

A 5

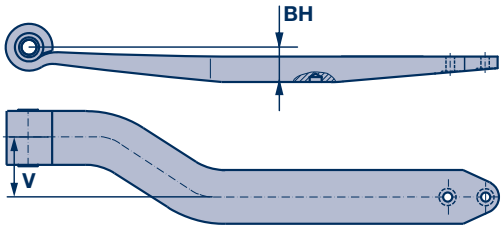

A 6

Trailing arms 1

Straight single leaf trailing arms, 100 mm wide 1.3

Straight single leaf trailing arms, 100 mm wide

Fig.	Dimension D	BH	L 1	BPW 36 BPW 30 L 2	BPW 36 L 2	L 3	L 4	L 5	FB Ø	BPW code no.: Trailing arm Item 1000 Item 1001 / 1002 3D	Suitable catch plate Item 1012 Item 1013 / 1014 3D
100 mm wide (B)											
A 1	1 x 48	70	500	-					30	05.082.13.85.0	05.348.30.05.0
A 3				310	-	-	275	345		05.082.12.92.0	
A 4		23		380	355	295	345	415		05.082.13.71.0	
A 3	1 x 51	70	500	310	-	-	275	345		05.082.13.48.0	
A 3				380	355	295	345	415		05.082.13.37.0 *	05.348.30.14.0
A 3										05.082.13.18.0	05.348.30.05.0
A 6	1 x 58	11	500	-	-	-	-	-		05.082.13.99.1	
A 4	1 x 60	90	690	310	-	-	275	345		05.082.13.32.0	05.348.30.11.0
100 mm wide (B) - 3D trailing arm											
A 5	1 x 50	70	500	310	-	-	275	345	30	05.082.12.99.0 L 05.082.12.98.0 R	05.348.30.08.0 L 05.348.30.18.0 R

L = Left side

R = Right side

Item	Designation	BPW code no.:	Dimension	Remark
1005	Bush (steel / rubber / steel)	02.0315.98.00 02.0314.24.00	**Ø 30** / 60 x 72 **Ø 24** / 60 x 72	for 70 mm wide trailing arm
	Bush (steel / rubber / steel) Bush (rubber / steel) [1]	02.0316.90.00 02.0316.06.00	**Ø 30** / 57 x 102 **Ø 30** / 60 x 102	for 100 mm wide trailing arm
1015	Rubber plugs for catch plate	03.379.00.27.0		

* for steering axle

[1] for old trailing arms with rubber / steel bush

Loose centre bolt for trailing arms see Chap. 1.6.

1 Trailing arms

1.4 Cranked single leaf trailing arms, 100 mm wide

O
SL
AL

Cranked single leaf trailing arms, 100 mm wide

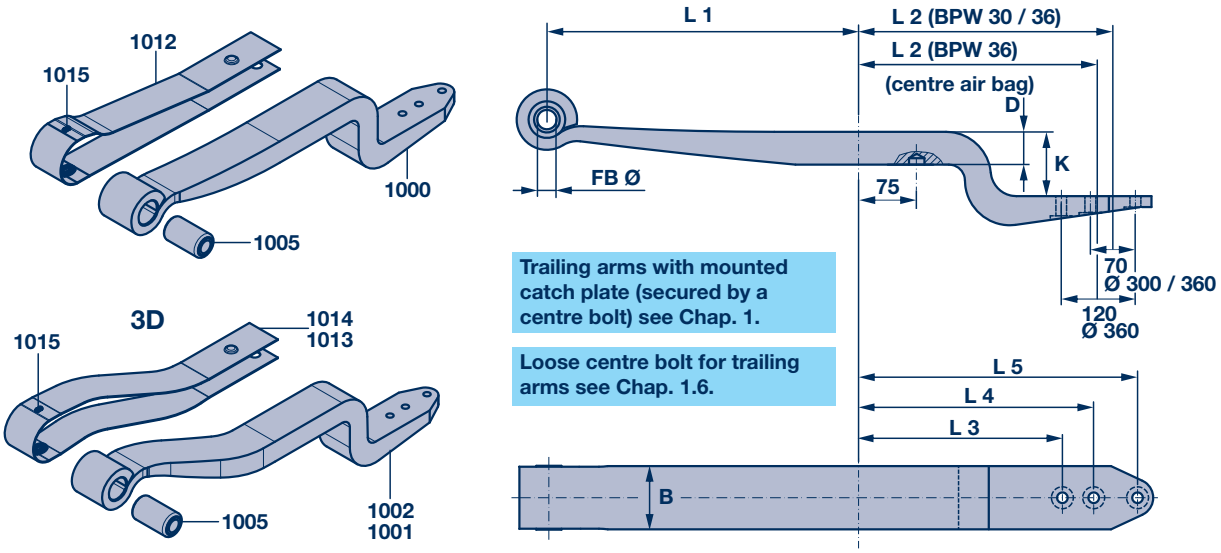

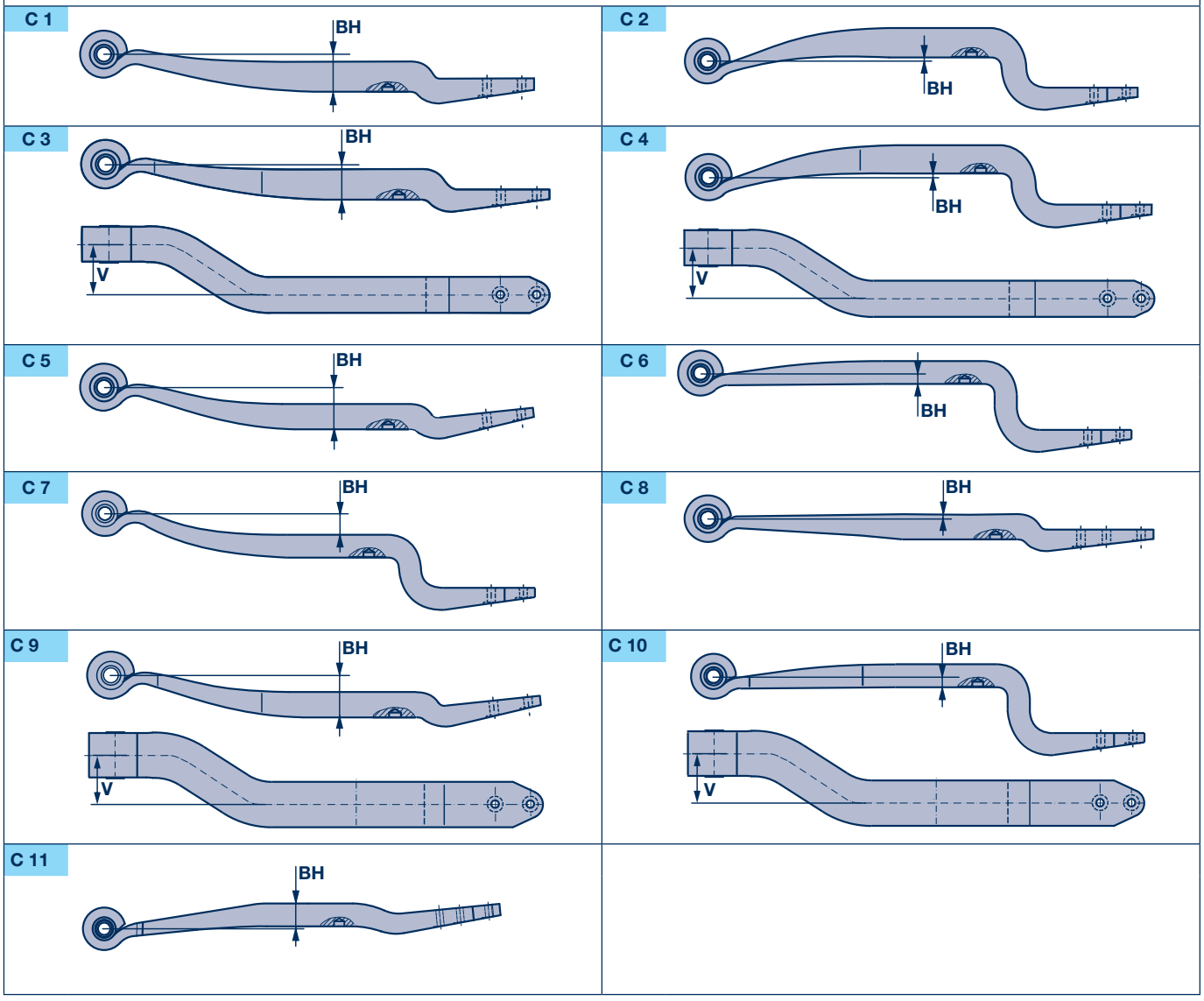

Trailing arms 1

Cranked single leaf trailing arms, 100 mm wide 1.4

O
SL
AL

Cranked single leaf trailing arms, 100 mm wide

Fig.	Dimension K	D	BH	L 1	BPW 36 BPW 30 L 2	L 3	L 4	L 5	L	FB Ø	BPW code no.: Trailing arm Item 1000 Item 1001 / 1002 3D	Suitable catch plate Item 1012 Item 1013 / 1014 3D
100 mm wide (B)												
C 11	**15**	1 x 57	62	500	380/405	345	415	465	940	30	05.082.14.30.0	05.348.30.88.0
C 5	**25**	1 x 48	92	500	380	-	345	415	915		05.082.13.80.0	05.348.30.05.0
C 9		1 x 50	92	500	380	-	345	415	915		05.082.13.81.0 L 05.082.13.82.0 R	05.348.30.08.0 L 05.348.30.18.0 R
C 1	**30**	1 x 48	70	500	310	-	275	345			05.082.13.51.0	05.348.30.05.0
		1 x 50	70	500	310	-	275	345			05.082.13.53.0 L 05.082.13.54.0 R	05.348.30.08.0 L 05.348.30.18.0 R
		1 x 51	70	500	310	-	275	345			05.082.13.59.0	05.348.30.05.0
		1 x 48	70	500	380	-	345	415			05.082.13.56.0	05.348.30.05.0
C 9		1 x 50	70	500	380	-	345	415			05.082.13.77.0 L 05.082.13.76.0 R	05.348.30.08.0 L 05.348.30.18.0 R
C 1		1 x 51	70	500	380	-	345	415			05.082.13.67.0	05.348.30.05.0
C 1		1 x 51	70	550	380	-	345	415	965		05.082.13.84.0	05.348.30.33.0
C 1		1 x 54	70	550	380	-	345	415			05.082.13.74.0	05.348.30.33.0
C 8	**45**	1 x 57		500	335	-	300	370	870		05.082.14.16.0	05.348.30.05.0
C 8		1 x 57	11	500	380/405	345	415	465	915		05.082.13.75.1	05.348.30.05.0
~ C 10		1 x 56	11	500	380/405	345	415	465	965		05.082.14.19.0 L 05.082.14.18.0 R	05.348.30.08.0 L 05.348.30.18.0 R
C 7	**62**	1 x 58		620	365	-	330	400			05.082.13.78.0	05.348.30.35.0
C 2	**100**	1 x 48	10	500	380	-	345	415			05.082.13.52.0	05.348.30.23.0
C 4		1 x 50	10	500	380	-	345	415			05.082.13.57.0 L 05.082.13.58.0 R	05.348.30.31.0 L 05.348.30.30.0 R
C 2		1 x 51	10	500	380	-					05.082.13.68.0	05.348.30.23.0
C 1		1 x 51	70	500	380	-	345	415			05.082.13.66.0	05.348.30.05.0
C 6	**150**	1 x 48	22	500	380	-	345	415			05.082.12.93.0	05.348.30.05.0
C 10		1 x 50	22	500	380	-	345	415			05.082.13.01.0 L 05.082.13.02.0 R	05.348.30.08.0 L 05.348.30.18.0 R
C 3		1 x 50	71	500	380/405	320	370	440			05.082.13.73.0 L 05.082.13.72.0 R	05.348.30.08.0 L 05.348.30.18.0 R
C 6		1 x 51	22	500	380	-	345	415			05.082.13.19.0	05.348.30.05.0
C 6		1 x 51	22	550	380	-	345	415			05.082.13.86.0	05.348.30.33.0
C 6		1 x 54	22	550	380	-	345	415			05.082.14.07.0	05.348.30.45.0
C 7		1 x 48	71	500	380/405	320	370	440			05.082.13.69.0	05.348.30.05.0
C 3	**163**	1 x 56	66	500	380/405	320	370	440			05.082.14.21.0 L 05.082.14.20.0 R	05.348.30.08.0 L 05.348.30.18.0 R
C 1		1 x 58	66	500	380/405	320	370	440	940		05.082.13.83.1	05.348.30.05.0
C 6	**205**	1 x 48	22	500	380	-	345	415			05.082.13.70.0	05.348.30.05.0

L = Left side
R = Right side

Item	Designation	BPW code no.:	Dimension	Remark
1005	Bush (steel / rubber / steel) Bush (rubber / steel) [1)]	02.0316.90.00 02.0316.06.00	Ø 30 / 57 x 102 Ø 30 / 60 x 102	for 100 mm wide trailing arm
1015	Rubber plugs for catch plate	03.379.00.27.0		

Loose centre bolt for trailing arms see Chap. 1.6.

1 Trailing arms

1.5 Straight double leaf trailing arms

O

SL

Straight double leaf trailing arms

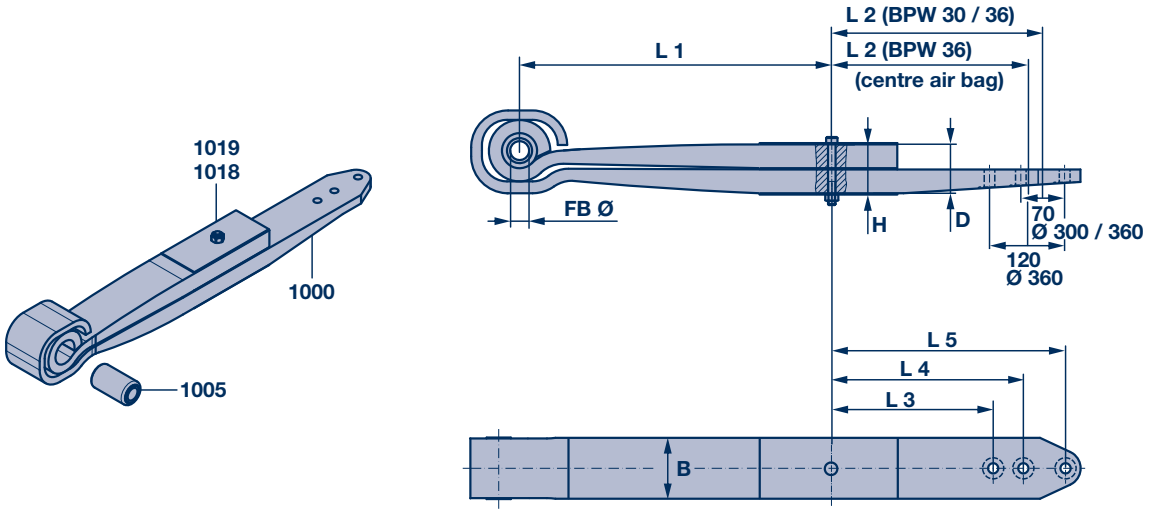

D 1

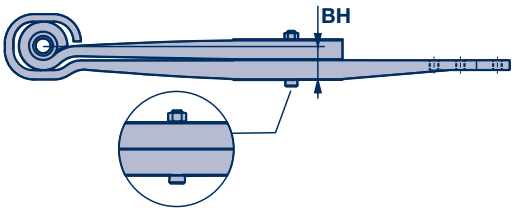

D 2

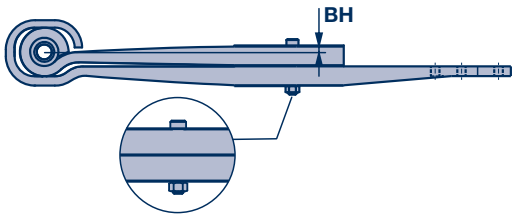

D 3

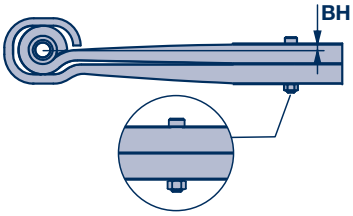

D 4

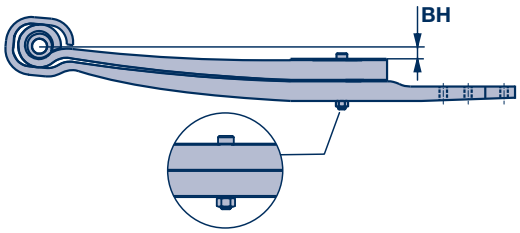

D 5

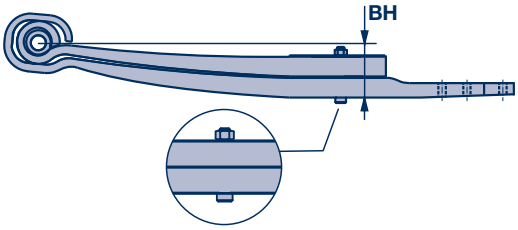

D 6

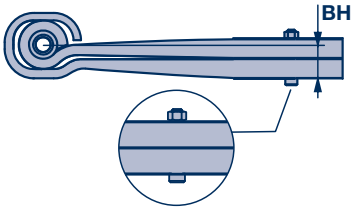

Trailing arms 1

Straight double leaf trailing arms 1.5

O

SL

Straight double leaf trailing arms

Fig.	Dimension D	H	BH	L 1	BPW 36 BPW 30 L 2	BPW 36 L 2	L 3	L 4	L 5	FB Ø	BPW code no.: Trailing arm Item 1000	Centre bolt Item 1018
70 mm wide (B)												
D 2	2 x 48	102	14	550	380	380/405	345	415	465	24	05.082.14.37.2	03.341.02.30.0
D 2					450	475	415	485	535	24	05.082.14.38.2	
D 4	2 x 56	116	31	690	335	310/335	250	300	370	24	05.082.14.41.2	03.341.02.32.0
100 mm wide (B)												
D 1	2 x 33	72	69	500	335	310	250	300	370	30	05.082.02.51.0	03.341.02.02.0
D 2			3								05.082.02.94.0	
D 1			59		380	355	295	345	415		05.082.12.66.0	
D 2			13								05.082.12.60.0	
D 2			6	550	335	310	250	300	370		05.082.02.74.0	
D 1	2 x 38	82	69	500	335						05.082.13.08.0	03.341.02.03.0
D 2			13		335/285						05.082.02.96.0	
D 2			13		335						05.082.02.95.0	
D 2			13		380	355	295	345	415		05.082.12.61.0	
D 1			69								05.082.12.67.0	
D 2	2 x 40	86	12	550	335	310	250	300	370		05.082.02.99.0	03.341.02.17.0
D 2		86	14		405	380	320	370	440		05.082.13.21.0	
D 3	2 x 43	92	13	500	-	-	-	-	-		05.082.13.46.0	03.341.02.18.0
D 1			72		335	310	250	300	370		05.082.13.87.0	
D 2			20								05.082.12.11.0	
D 1			79		380	355	295	345	415		05.082.12.68.0	
D 2			13								05.082.13.36.0	
D 3			14	550	-	-	-	-	-		05.082.13.65.0	
D 1			72		335	310	250	300	370		05.082.02.62.0	
D 1			78		405	380	320	370	440		05.082.13.07.0	
D 2			14								05.082.12.83.0	
D 1			78		475	450	390	440	510		05.082.12.94.0	
D 2			14								05.082.12.85.0	
D 4	2 x 45	94	31	690	335	310	250	300	370		05.082.13.20.0	03.341.02.15.0
D 3	2 x 51	108	22	550	-	-	-	-	-		05.082.14.29.0	03.341.02.04.0
D 6			86	550	-	-	-	-	-		05.082.14.15.0	
D 1			86		475	450	390	440	510		05.082.14.05.0	
D 2			22								05.082.14.06.0	
D 5		106	137	690	335	310	250	300	370		05.082.13.79.0	
D 4			31								05.082.13.63.0	
D 1	2 x 54	114	100	720	345	320	260	310	380		05.082.13.05.0	03.341.02.32.0
D 2			14								05.082.13.10.0	
D 6			100		-	-	-	-	-		05.082.14.27.0	

Item	Designation	BPW code no.:	Dimension	Remark
1005	Bush (steel / rubber / steel)	02.0314.24.00	**Ø 24** / 60 x 72	for 70 mm wide trailing arm
	Bush (steel / rubber / steel) Bush (rubber / steel) [1]	02.0316.90.00 02.0316.06.00	Ø 30 / 57 x 102 Ø 30 / 60 x 102	for 100 mm wide trailing arm
1019	Hexagon nut (for centre bolt item 1018)	02.5202.20.80	M 16 / 934-8	

[1] for old trailing arms with rubber / steel bush

1 Trailing arms

1.6 Cranked double leaf trailing arms, 100 mm wide

O

SL

Cranked double leaf trailing arms, 100 mm wide

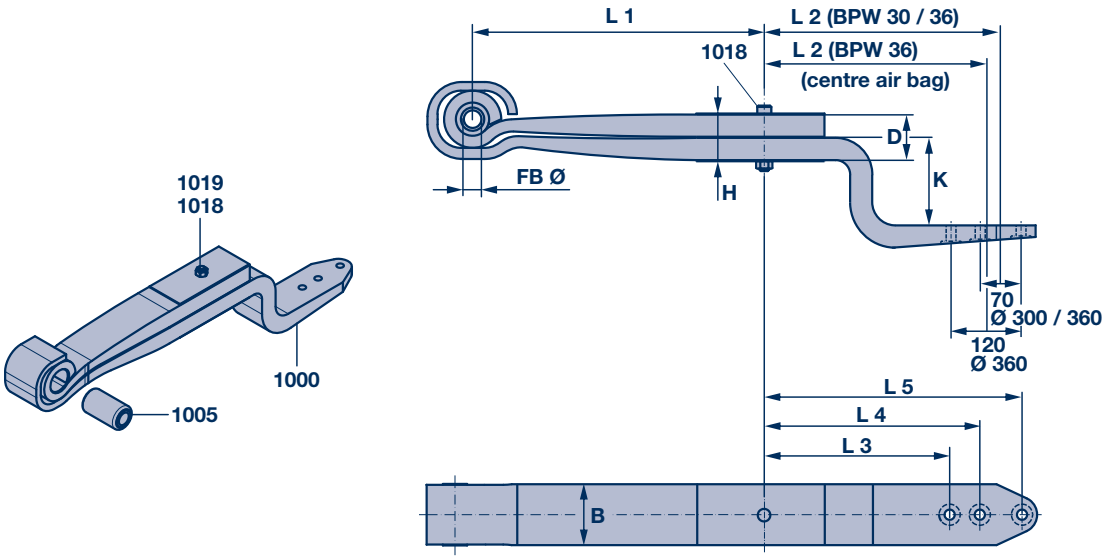

E 1

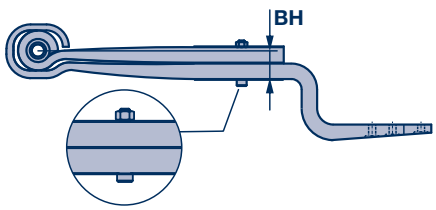

E 2

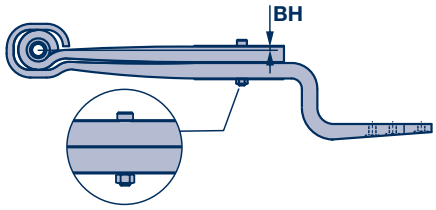

Trailing arms 1

Cranked double leaf trailing arms, 100 mm wide 1.6

Loose centre bolt 1.7

O

SL

Cranked double leaf trailing arms, 100 mm wide

Fig.	Dimension D	H	K	BH	L 1	BPW 36 BPW 30 L 2	BPW 36 L 2	L 3	L 4	L 5	FB Ø	BPW code no.: Trailing arm Item 1000	Centre bolt Item 1018
100 mm wide (B)													
E 1	2 x 33	72	100	68	470	390	365	305	355	425	30	05.082.02.66.0	03.341.02.02.0
E 2				4		340/390						05.082.02.97.0	
E 1			150	72	500	405	380	320	370	440		05.082.12.63.0	
E 1	2 x 38	82	100	68	470	390	365	305	355	425		05.082.13.26.0	03.341.02.03.0
E 2				14								05.082.12.43.0	
E 1			150	72	500	405	380	320	370	440		05.082.12.64.0	
E 2	2 x 40	86	50	14	550	405	380	320	370	440		05.082.12.88.0	03.341.02.17.0
E 2			120	14								05.082.02.45.0	
E 2				14	720							05.082.13.23.0	
E 1			150	72	550							05.082.12.84.0	
E 2	2 x 43	92	50	13	500	380	355	295	345	415		05.082.13.60.0	03.341.02.18.0
E 1			120	72	550	405	380	320	370	440		05.082.13.24.0	
E 2				20								05.082.13.34.0	
E 1			150	72	500							05.082.13.33.0	

Item	Designation	BPW code no.:	Dimension	Remark
1005	Bush (steel / rubber / steel) Bush (rubber / steel) [1]	02.0316.90.00 02.0316.06.00	02.0316.90.00 02.0316.06.00	for 100 mm wide trailing arm
1019	Hexagon nut (for centre bolt item 1018)	02.5202.20.80	M 16 / 934-8	

[1] for old trailing arms with rubber / steel bush

Loose centre bolt for trailing arms

Leaf spring thickness incl. catch plate H	Dimension	Centre bolt (item 1018) BPW Code no.
1 x 40	M 16 x 60-8.8	03.341.02.06.0
1 x 48	M 16 x 70-8.8	03.341.02.31.0
1 x 50	M 16 x 75-8.8	03.341.02.14.0
2 x 33	M 16 x 90-8.8	03.341.02.02.0
2 x 38	M 16 x 100-8.8	03.341.02.03.0
2 x 40	M 16 x 105-8.8	03.341.02.17.0
2 x 43	M 16 x 110-8.8	03.341.02.18.0
2 x 45	M 16 x 115-8.8	03.341.02.15.0
2 x 48	M 16 x 120-8.8	03.341.02.30.0
2 x 51	M 16 x 130-8.8	03.341.02.04.0
2 x 54	M 16 x 135-8.8	03.341.02.32.0
2 x 65	M 16 x 165-8.8	03.341.02.16.0
Hexagon nut (item 1019) for centre bolt		02.5202.20.80 M 16 / 934-8

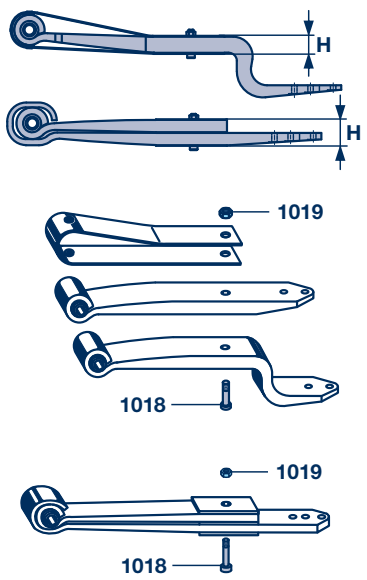

2 Axle plates, spring seat arrangements

General

O

SL

AL

BPW spring seat arrangements

The axle is connected to the trailing arm using the **spring seat arrangement** comprising: spring plates, spring pads, if necessary segments and spring U-bolts.

Clamped, positive-locking spring seat arrangements ensure an even force transfer into the axle proportional to the degree of load. This is possible with round and square axle beams which therefore offer a long service life.

In the case of square axle beams, the supports are attached at the reinforced corners of the axle beam (no welded connection).

In the case of round axle beams, a patented high-tech laser process ensures a secure fit and the greatest possible robustness for the spring seat arrangement.

The modular construction guarantees a service-friendly repair.

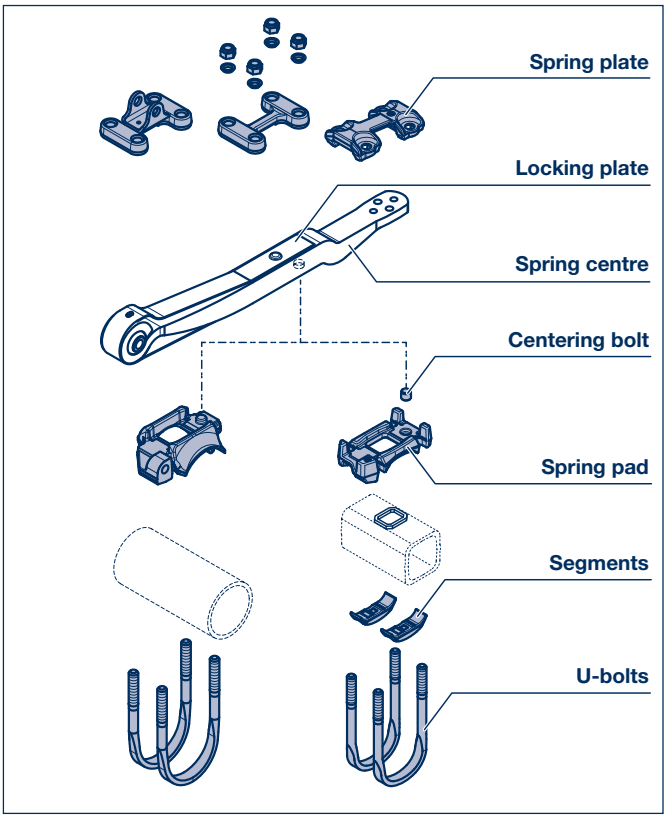

Welded spring seat arrangements are mainly used with a round axle cross section, steering axles as well as heavy-duty air suspension systems.

As a load-bearing component of the suspension unit, the trailing arm requires particular attention.

The following instructions should be carefully adhered to during repair and maintenance work:

- **Do not work on trailing arms with a hammer or any sharp objects.**
- **Do not work on the trailing arms with cutters or grinders.**
  The guide bed should always be widened if replacement trailing arms do not fit exactly into the bed of the axle spring seats.

Spare parts for ECO Air (EA) air suspensions see Chap. 11.

Spare parts for ECO Air COMPACT (AC) air suspensions see Chap. 12.

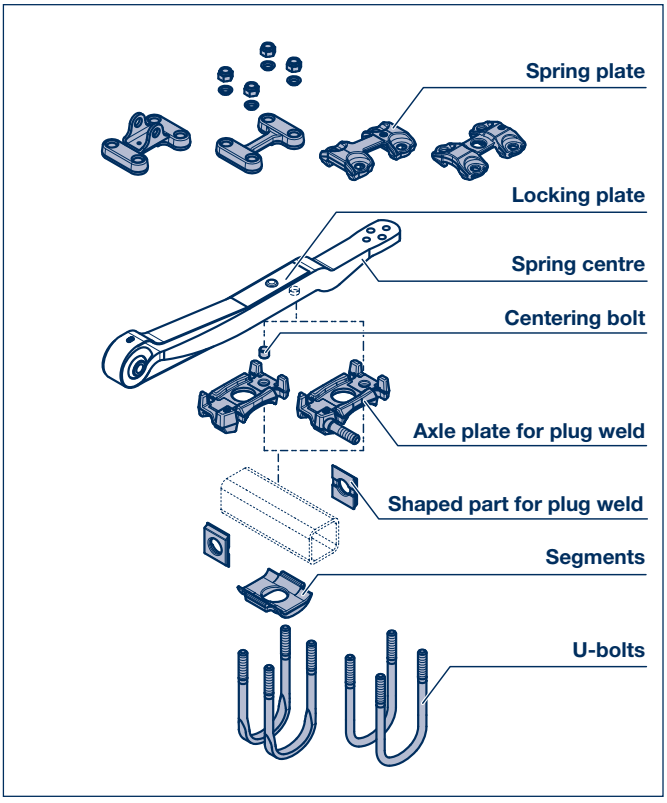

Axle plates, spring seat arrangements 2

General

Determining spring seat arrangements

Clarifying the version

- Trailing arm 70 mm or 100 mm wide
- Axle cross section Ø 127 / Ø 146 / □ 120 / □ 150
- Spring seat arrangement, clamped or welded
- Round centering ring or square frame with clamped square spring seat arrangement
- Axle plates with centering cone
- Shock absorber attachment:
  - Axle plates without shock absorber attachment
  - Axle plates with welded bolt for shock absorber attachment or spring plate for shock absorber attachment
- Trailing arms mounted above or below
- Spring U-bolts or hexagon screws
- Spring U-bolt encloses axle beam or is positioned to the side
- Spring U-bolts or screws mounted above or below
- Single or double segments

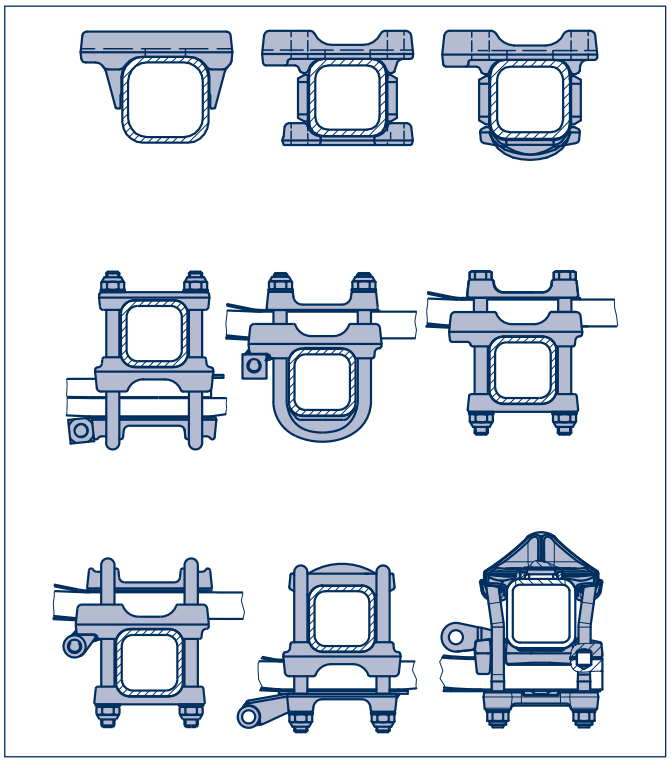

Tracking plates

Weld tracking plates after installation and tracking at the rear end of the spring plates or axle plates – weld a 4 ◺ x 80.

☞ **Do not weld the trailing arms!**

Follow the welding guidelines given in the BPW installation instructions!

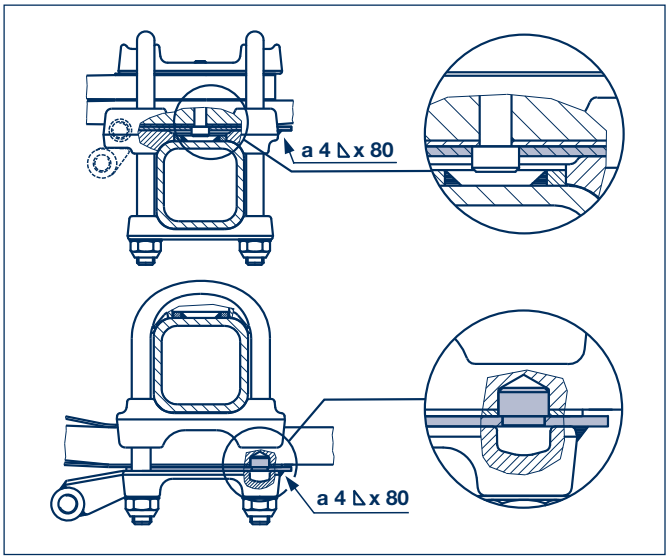

☞ **Important for all welding work!**

The trailing arms, spring U-bolts, air bags, shock absorbers and plastic lines must be protected against flying sparks and weld spatter during all welding work.

Under no circumstances must the earth terminal be attached to the trailing arm or hub.

2 Axle plates, spring seat arrangements

2.1 Welded spring seat arrangements

2.1.1 Trailing arms mounted above

O
SL
AL

Spring seat arrangements, welded

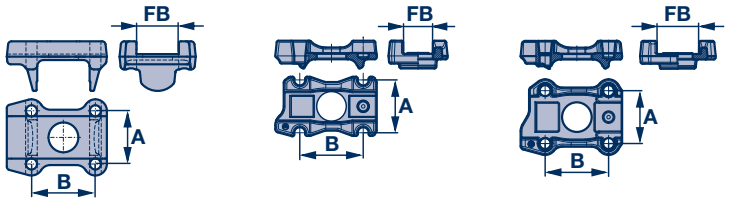

Axle plates without shock absorber attachment

A 1 Axle plates with welding lugs

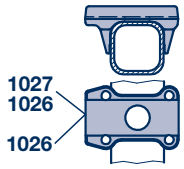

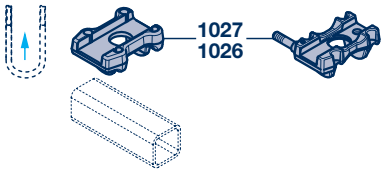

A 2 Axle plates without welding lugs

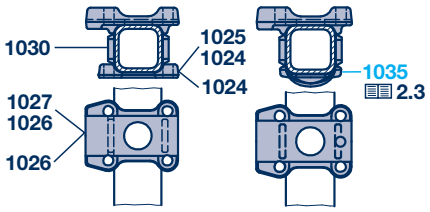

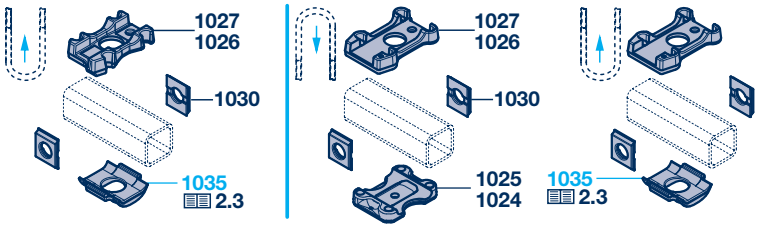

Axle plates with bolt for shock absorber attachment

A 3 Axle plates without welding lugs

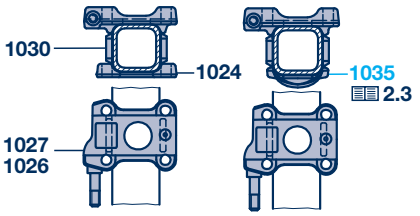

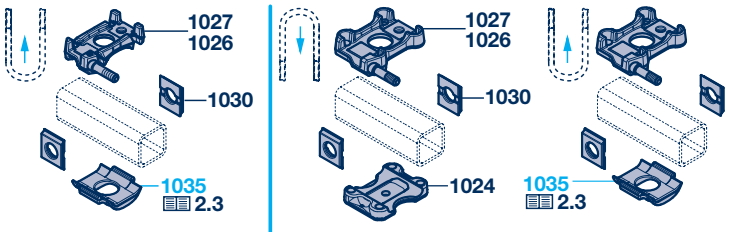

A 4 Axle plates without welding lugs

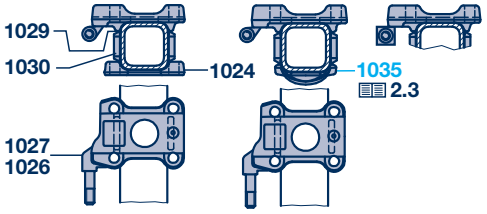

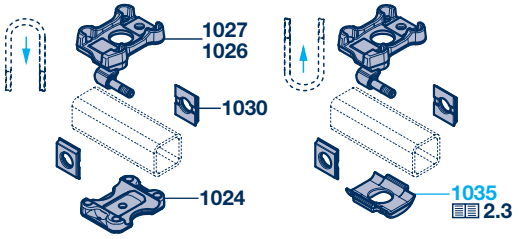

Spring seat arrangement with clamp plates

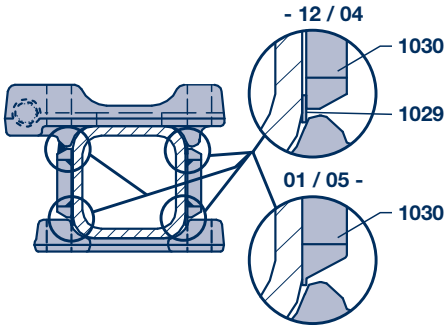

Spring seat arrangement with segment

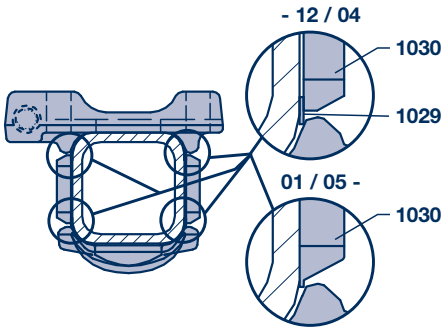

Axle plates, spring seat arrangements 2

Welded spring seat arrangements 2.1

Trailing arms mounted above 2.1.1

Spring seat arrangements, welded

Item	Designation	Dimension	Fig.	BPW code no.:				
	Leaf spring width (FB)			70 mm	100 mm			
	Axle beam			Rigid axle, Steering axle LL ☐ 120	Rigid axle ☐ 120	Steering axle L/LS/LL ☐ 120 / ■ 120	Rigid axle Ø 127	Rigid axle Steering axle ☐ 150
	Axle plates with welding lugs, without shock absorber attachment							
	Spring seat arrangement identification key				**OM / VO**			
1026	Axle plate, above	A 125 / B 150	**A 1**	-	03.032.18.76.0	**03.032.18.99.0**	-	-
		A 125 / B 155		-	-	-	03.032.58.18.0	-
		A 125 / B 180		-	-	-	-	03.032.19.87.0
1026	Axle plate, above right	A 125 / B 150		-	-	03.032.18.54.0	-	-
1027	Axle plate, above left	A 125 / B 150		-	-	03.032.18.53.0		
	Axle plates with welding lugs, with bolt for shock absorber attachment							
	Spring seat arrangement identification key			**MR1..**				
1026	Axle plate, above right	A 125 / B 150	**A 1**	05.032.22.34.8				
1027	Axle plate, above left	A 125 / B 150		05.032.22.35.8				
	Axle plates without shock absorber attachment							
	Spring seat arrangement identification key			**7O1/7M2**	**OM / VO / VO13**			
1026	Axle plate, above right	A 125 / B 150	**A 2**	03.032.21.10.8	03.032.21.46.8	03.032.21.46.8	-	-
1027	Axle plate, above left	A 125 / B 150		03.032.21.09.8	03.032.21.45.8	03.032.21.45.8		
1026	Axle plate, above	A 125 / B 155		-	-	-	03.032.58.18.0	-
		A 125 / B 180		-	-	-	-	03.032.10.43.0
				2M2.. / 2R..				
1026	Axle plate, above right	A 125 / B 150	**A 2**	01.032.22.22.0				
1027	Axle plate, above left	A 125 / B 150		01.032.22.23.0				
	Axle plates with bolt for shock absorber attachment							
	Spring seat arrangement identification key			**7R1..**	**OR / OR1 / OR13**			
1026	Axle plate, above right	A 125 / B 150	**A 3**	05.032.21.36.8	05.032.21.50.8	05.032.21.50.8	-	-
		A 125 / B 155		-	-	-	05.032.58.22.0	-
		A 125 / B 180		-	-	-	-	05.032.10.48.0
1027	Axle plate, above left	A 125 / B 150		05.032.21.37.8	05.032.21.49.8	05.032.21.49.8	-	-
		A 125 / B 155		-	-	-	05.032.58.21.0	-
		A 125 / B 180		-	-	-	-	05.032.10.47.0
				2R1..				
1026	Axle plate, above right	A 125 / B 150	**A 3**	05.032.22.26.8				
1027	Axle plate, above left	A 125 / B 150		05.032.22.27.8				
	Axle plates with bolt for shock absorber attachment							
	Spring seat arrangement identification key			**2R2**	**OR23**			
1026	Axle plate, above right	A 125 / B 150	**A 4**	05.032.22.28.8	05.032.21.52.8	05.032.27.64.0	-	-
		A 125 / B 180		-	-	-	-	05.032.11.40.0
1027	Axle plate, above left	A 125 / B 150		05.032.22.29.8	05.032.21.51.8	05.032.27.63.0	-	-
		A 125 / B 180		-	-	-	-	05.032.11.41.0
1024	Axle plates, below (clamp plates)	A 125 / B 150		-	03.032.17.05.1	**03.032.17.05.1**	-	-
		A 125 / B 155		-	-	-	03.032.38.13.0	-
		A 125 / B 180		-	-	-	-	03.032.19.26.0
1024	Axle plates, below right (clamp plates)	A 125 / B 150		-	-	03.032.18.92.0	-	-
1025	Axle plates, below left (clamp plates)	A 125 / B 150		-	-	03.032.18.93.0	-	-
1029	Plate	20 x 75 x 8		-	-	03.283.53.12.0	-	-
1030	Shaped part	82 x 84 x 15		03.001.14.97.0	03.001.14.97.0	03.001.14.97.0	-	-
		88 x 108 x 15		-	-	-	-	03.001.35.10.0
1035	Segment			see Chap. 2.3				

Alternative versions on request.

2 Axle plates, spring seat arrangements

2.1 Welded spring seat arrangements

2.1.2 Trailing arms mounted below

O
SL
AL

Spring seat arrangements, welded

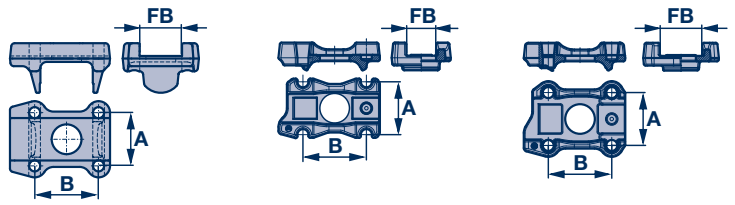

Axle plates without shock absorber attachment

B 1 Axle plates with welding lugs

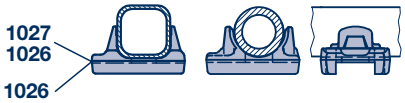

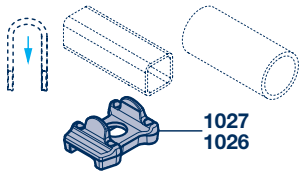

B 2 Axle plates with welding lugs

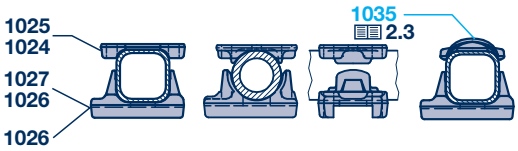

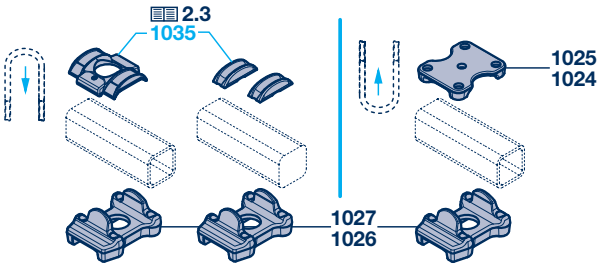

B 3 Axle plates without welding lugs

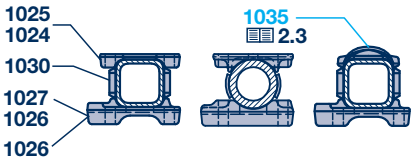

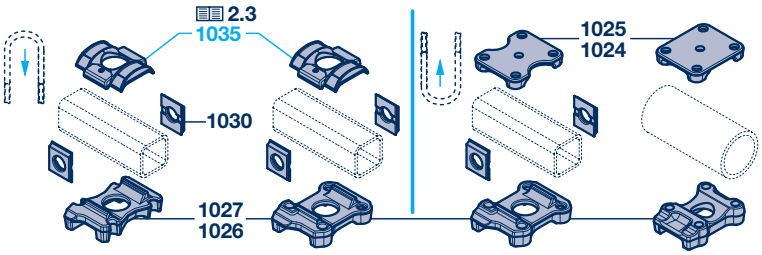

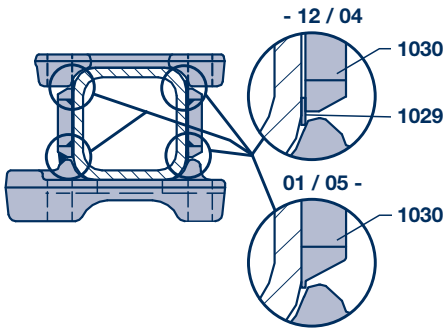

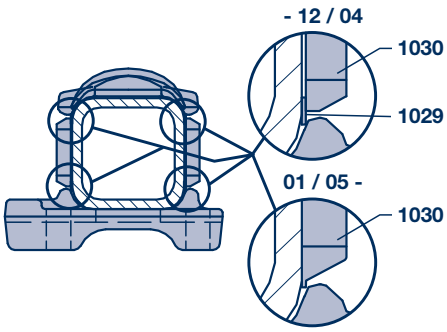

Axle plates, spring seat arrangements 2

Welded spring seat arrangements 2.1

Trailing arms mounted below 2.1.2

Spring seat arrangements, welded								
Item	Designation	Dimension	Fig.	BPW code no.:				
	Leaf spring width (FB)			70 mm	100 mm			
	Axle beam			Rigid axle ☐ 120 Steering axle LL ☐ 120 / ■ 120	Rigid axle ☐ 120 Rigid axle ■ 120 Steering axle LS / LL ☐ 120 / ■ 120	Steering axle L ■ 120	Rigid axle Ø 127	Rigid axle Steering axle ☐ 150
	Axle plates with welding tabs, without clamp plates							
	Spring seat arrangement identification key				**OT..**			
1026	Axle plate, below	A 125 / B 150	**B 1**	-	**03.032.18.99.0**	**03.032.27.44.0**	-	-
		A 125 / B 155		-	-	-	03.032.38.75.0	-
		A 125 / B 180		-	-	-	-	03.032.19.87.0
1026	Axle plates, below right	A 125 / B 180		-	03.032.18.54.0		-	-
1027	Axle plates, below left	A 125 / B 180		-	03.032.18.53.0			
	Axle plates with welding lugs, with clamp plates / segment							
	Spring seat arrangement identification key			**MT2..**	**OT.. / SLU.. / ALU..**			
1026	Axle plate, below	A 125 / B 180	**B 2**	03.032.22.32.8	03.032.18.76.0			
				05.032.22.37.8 [1]				
				05.032.22.67.8 [2]				
		A 125 / B 150		05.032.22.52.8				
		FB = 100.5		-	**03.032.18.99.0**	03.032.18.99.0	-	-
		FB = 99.7		-	03.032.27.44.0	**03.032.27.44.0**	-	-
1026	Axle plates, below right	A 125 / B 150		-	03.032.18.54.0	-	-	-
1027	Axle plates, below left	A 125 / B 150		-	03.032.18.53.0			
	Axle plates without welding lugs, with clamp plates / segment							
	Spring seat arrangement identification key			**7T..**	**OT.. / SLU.. / ALU..**			
1026	Axle plates, below right	A 125 / B 150	**B 3**	03.032.21.09.8	03.032.21.46.8	-	-	-
1027	Axle plates, below left	A 125 / B 150		03.032.21.10.8	03.032.21.45.8			
1026	Axle plate, below	A 125 / B 155		-	-	-	03.032.58.18.0	-
		A 125 / B 180		-	-	-	-	03.032.10.44.0
				2T..				
1026	Axle plates, below right	A 125 / B 150	**B 3**	01.032.22.22.0				
1027	Axle plates, below left	A 125 / B 150		01.032.22.23.0				
1024	Axle plates, above (clamp plates)	A 125 / B 150			03.032.17.05.1	03.032.26.19.0	-	-
		A 125 / B 155		-	-	-	03.032.38.13.0	-
		A 125 / B 180		-	-	-		03.032.19.26.0
1024	Axle plates, above right (clamp plates)	A 125 / B 150		-	03.032.17.84.0	-	-	
1025	Axle plates, above left (clamp plates)	A 125 / B 150		-	03.032.17.85.0	-	-	
1030	Shaped part	82 x 84 x 15		03.001.14.97.0		-	-	
		88 x 108 x 15						03.001.35.10.0
1035	Segment			see Chap. 2.3				

[1] Axle plates with welded-in plate
[2] Axle plates with welded-in washer
Alternative versions on request.

O
SL
AL

2 Axle plates, spring seat arrangements

2.2 Clamped spring seat arrangements

2.2.1 Trailing arms mounted above

SL

AL

Clamped spring seat arrangements

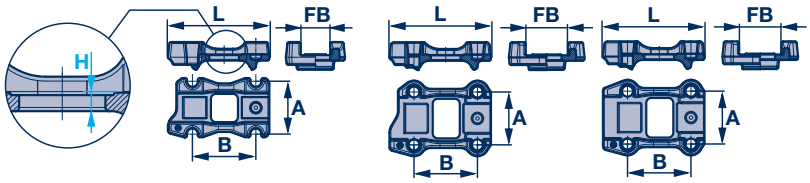

Axle plates without shock absorber attachment

C 1

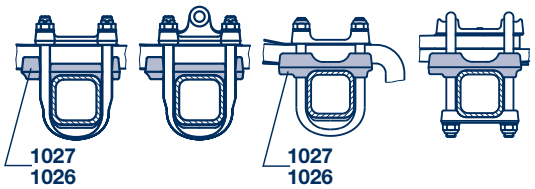

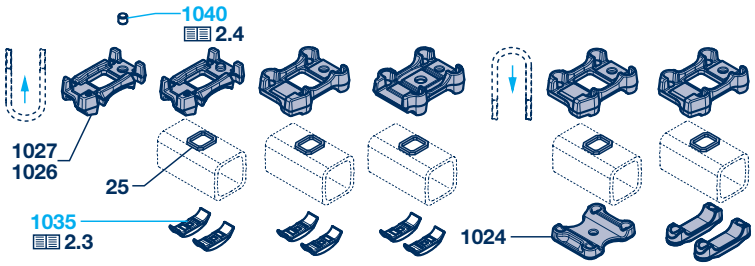

Axle plates with bolt for shock absorber attachment

C 2

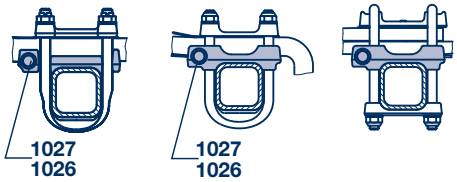

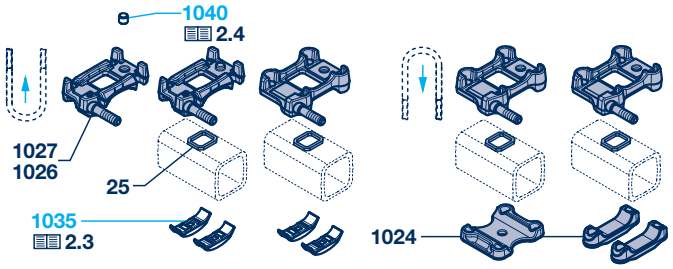

C 3

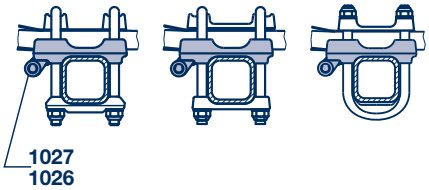

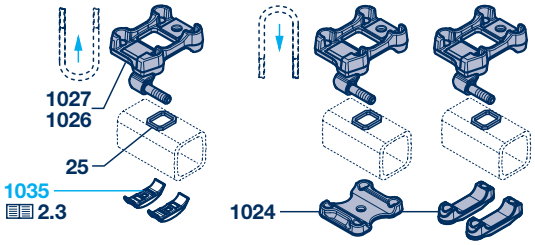

C 4

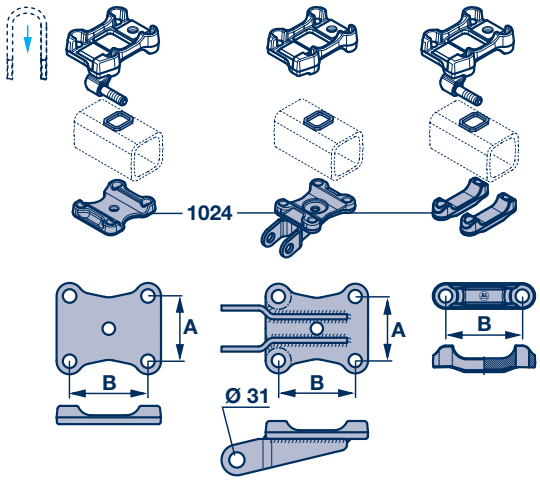

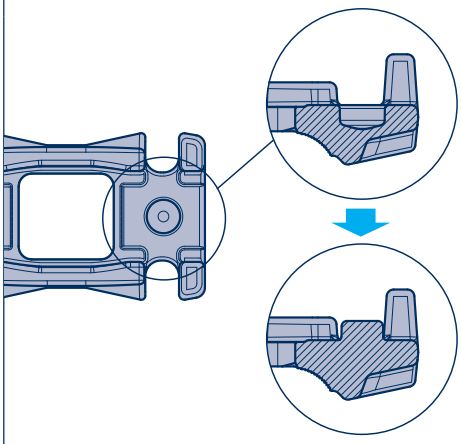

Axle plates with centering bore

Axle plates, spring seat arrangements 2

Clamped spring seat arrangements 2.2

Trailing arms mounted above 2.2.1

SL

AL

Clamped spring seat arrangements								
Item	Designation	Dimension	H	L	Fig.	BPW code no.:		
	Leaf spring width (FB)					70 mm	100 mm	
	Axle beam					Rigid axle Steering axle LL ☐ 120	Rigid axle Steering axle LL ☐ 120	Rigid axle Steering axle ☐ 150
25	Profiled part (centering frame)	72.5 x 60 x 8				03.295.46.21.0 *		
	Axle plates without shock absorber attachment							
	Spring seat arrangement identification key					71../7O2..	L1.. / L2.. / L9.. / LG.. / LH.. / LO..	
						Axle plate with hole for centering bolt		
1026	Axle plate, above right	A 92 / B 148	14	240	C 1	03.032.21.14.0 [1]	-	-
		A 125 / B 150	13	240		-	03.032.21.58.0	-
1027	Axle plate, above left	A 92 / B 148	14	240		03.032.21.15.0 [1]	-	-
		A 125 / B 150	13	240		-	03.032.21.59.0	-
1026	Spring pad	A 125 / B 150	15	240		-	03.032.26.08.0	-
		A 125 / B 150	23	235		-	03.032.21.55.0	-
		A 125 / B 180	15	265		-	-	03.032.11.24.0
						Axle plates with integrated centering bolt		
1026	Axle plate, above right	A 92 / B 148	14	240		03.032.22.06.0	-	-
1027	Axle plate, above left	A 92 / B 148	14	240		03.032.22.05.0		
	Axle plates with bolt for shock absorber attachment							
	Spring seat arrangement identification key					7I1..	LI1..	
						Axle plate with hole for centering bolt		
1026	Axle plate, above right	A 92 / B 148	14	240	C 2	05.032.21.18.0 [1]	-	-
		A 125 / B 150	13	240		-	05.032.21.70.0	
1027	Axle plate, above left	A 92 / B 148	14	240		05.032.21.19.0 [1]	-	
		A 125 / B 150	13	240		-	05.032.21.71.0	
						Axle plates with integrated centering bolt		
1026	Axle plate, above right	A 92 / B 148	14	240		05.032.22.10.0	-	-
1027	Axle plate, above left	A 92 / B 148	14	240		05.032.22.09.0		
	Axle plates with bolt for shock absorber attachment							
	Spring seat arrangement identification key					-	LI2..	
1026	Axle plate, above right	A 125 / B 150	13	240	C 3	-	05.032.21.68.0	-
		A 125 / B 180	15	265		-	-	05.032.11.32.0
1027	Axle plate, above left	A 125 / B 150	13	240		-	05.032.21.69.0	-
		A 125 / B 180	15	265		-	-	05.032.11.31.0
1024	Axle plate, below	A 125 / B 150			C 4	-	03.032.27.67.2	-
		A 125 / B 180				-	-	03.032.10.63.0
	Lower axle plate for U-stabilizer							
1024	Support	A 125 / B 150			C 4	-	05.189.14.23.0	-
		A 125 / B 180				-	-	05.189.13.10.0
1024	Axle plate, below (double bar)	B 150			C 4	-	03.032.26.62.0	-
		B 180				-	-	03.032.11.20.0
1035	Segment					see Chap. 2.3		

* Replacement for profile part (centering frame) 03.295.46.20.0

[1] Replaced by axle plates with integrated centering bolt.

Alternative versions on request.

2 Axle plates, spring seat arrangements

2.2 Clamped spring seat arrangements

2.2.2 Trailing arms mounted above - Axle beam Ø 146

AL

Clamped spring seat arrangements

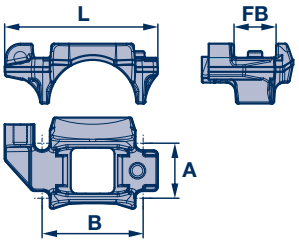

Axle plates without shock absorber attachment

C 5

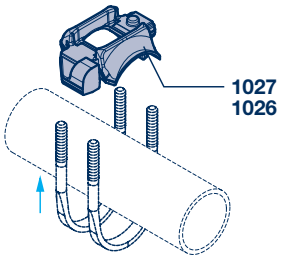

Spring pad with threaded hole for shock absorber attachment

C 6

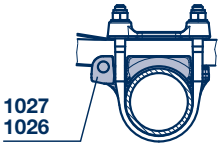

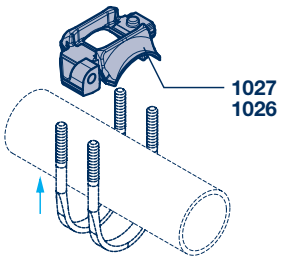

Item	Designation	Dimension	L	Leaf spring width (FB)	Fig.	Spring seat arrangement identification key	BPW code no.:
	Axle plates without shock absorber attachment						
1026	Axle plate, above right	A 92 / B 169	256	70	**C 5**	**RO2S**	03.032.22.66.0
1027	Axle plate, above left	A 92 / B 169	256	70	**C 5**	**RO2S**	03.032.22.65.0
	Spring pad with threaded hole for shock absorber attachment						
1026	Axle plate, above right	A 92 / B 169	256	70	**C 6**	**RI1S**	03.032.22.64.0
1027	Axle plate, above left	A 92 / B 169	256	70	**C 6**	**RI1S**	03.032.22.63.0

Axle plates, spring seat arrangements 2

Clamped spring seat arrangements 2.2

Trailing arms mounted below 2.2.3

Clamped spring seat arrangements

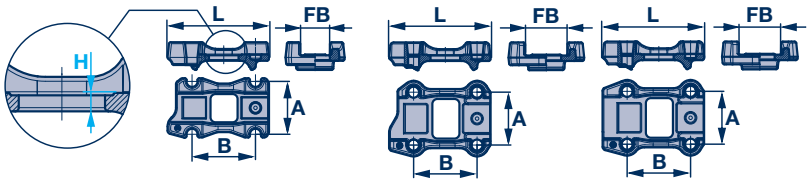

Axle plates without shock absorber attachment

D 1

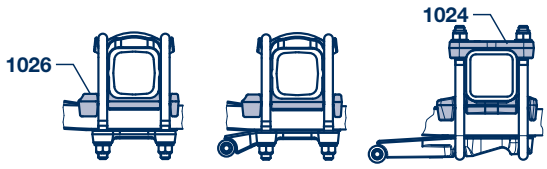

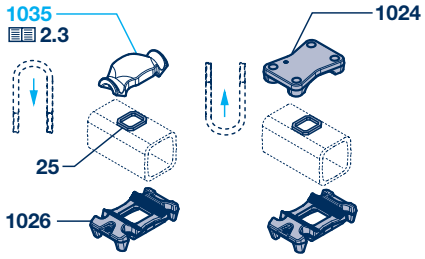

D 2

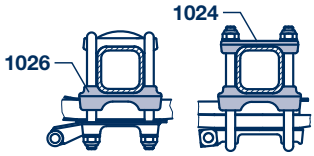

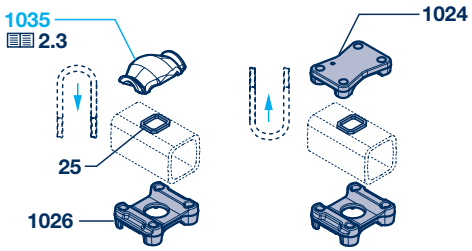

Item	Designation	Dimension	H	L	Fig.	BPW code no.:		
	Leaf spring width (FB)					70 mm	100 mm	
	Axle beam					Rigid axle Steering axle LL □ 120	Rigid axle Steering axle LL □ 120	Rigid axle Steering axle □ 150
25	Profiled part (centering frame)	72.5 x 60 x 8				03.295.46.21.0 *		
	Axle plates without shock absorber attachment							
	Spring seat arrangement identification key					7U..	LU..	
1026	Axle plate, below	A 92 / B 148	15	222	**D 1**	03.032.22.01.0	-	-
1026	Axle plate, below	A 125 / B 150	15	214	**D 2**	-	**03.032.27.62.0**	-
		A 125 / B 150	23	235		-	03.032.21.55.0	-
		A 125 / B 150	14	240		-	03.032.26.61.0	-
		A 125 / B 180	15	240		-	-	03.032.10.77.0
1024	Axle plate, above	A 92 / B 148				03.032.21.99.0	-	-
		A 125 / B 150				-	05.032.21.44.0	-
		A 125 / B 180				-	-	03.032.11.16.0
1035	Segment					see Chap. 2.3		

* Replacement for profile part (centering frame) 03.295.46.20.0 (72.5 x 60 x 12)

Alternative versions on request.

2 Spring seat arrangements

2.3 Segments, spring plates

2.3.1 Single segments

O
SL
AL

Single segments

A Segment above the spring

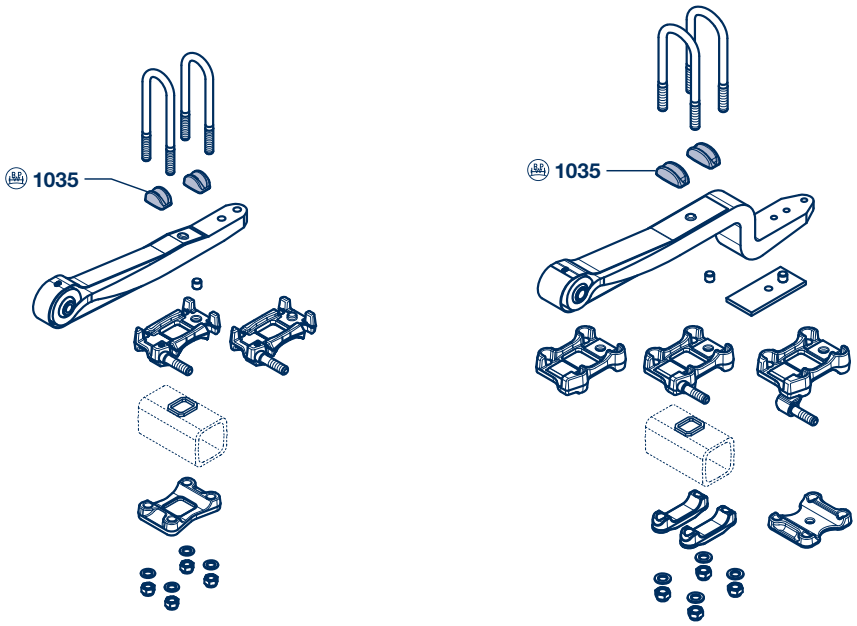

B Segment on the axle beam

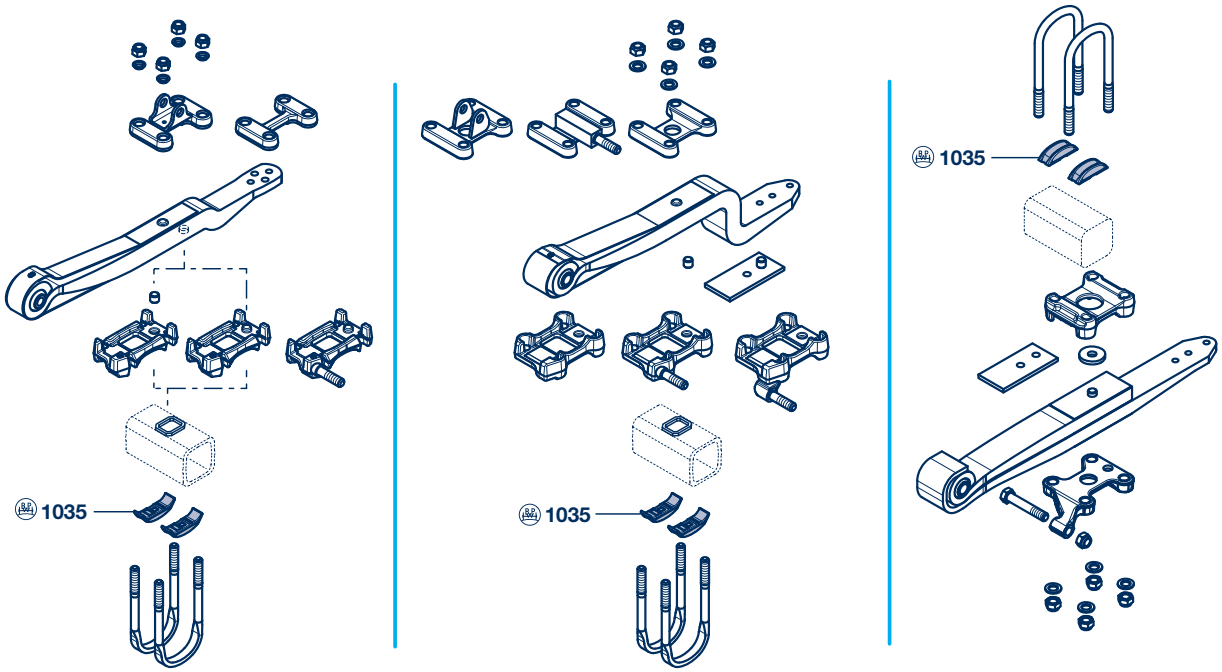

Spring seat arrangements 2

Segments, spring plates 2.3

Single segments 2.3.1

Single segments						
Item	**Designation**	**Applications**	**Leaf spring width (FB)**	**Remark**	**BPW code no.:**	
A	**Segment above the spring**					
1035	Segment	☐ **120**	70		03.345.22.02.0	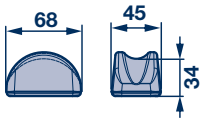
		☐ **120** ☐ **150**	100		03.345.21.01.0	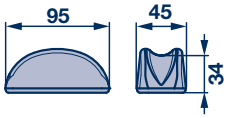
B	**Segment on the axle beam**					
1035	Segment	☐ **120**	100		03.345.23.02.1	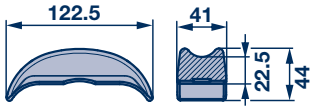
				flattened spring U-bolts (disc brake)	03.345.23.09.0	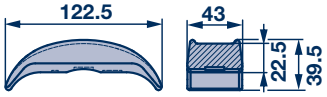
		■ **120 solid**	100	flattened spring U-bolts (disc brake)	03.345.23.12.0	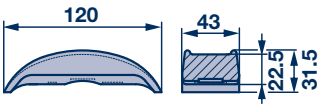
		■ **120 solid**	100		03.345.23.03.0 *	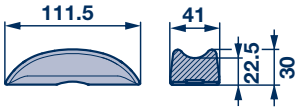
		☐ **150**	100		03.345.25.01.1	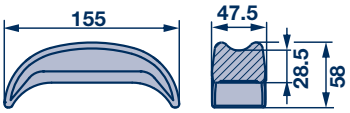
		■ **150 solid**	100		03.345.25.04.0 *	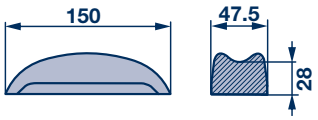

* welded on axle beam
Alternative versions on request.

2 Spring seat arrangements

2.3 Segments, spring plates

2.3.2 Double segments

O

SL

AL

Double segments

Double segment, spring U-bolt mounted from above

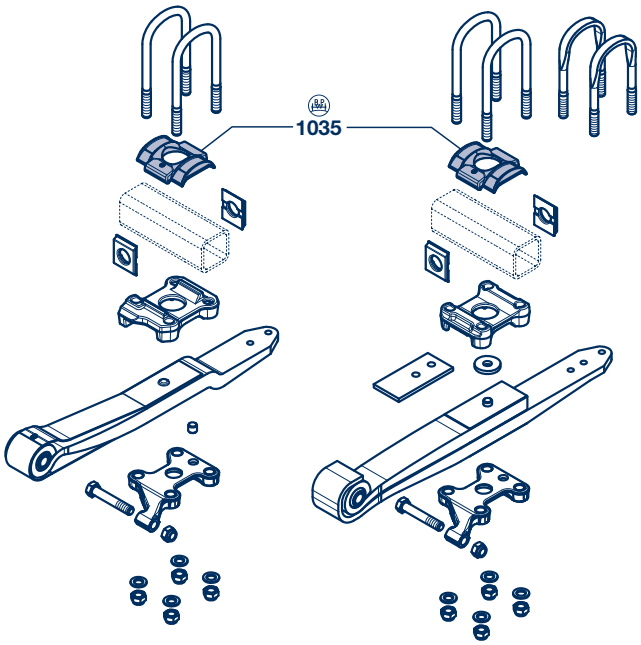

Double segment, spring U-bolt mounted from below

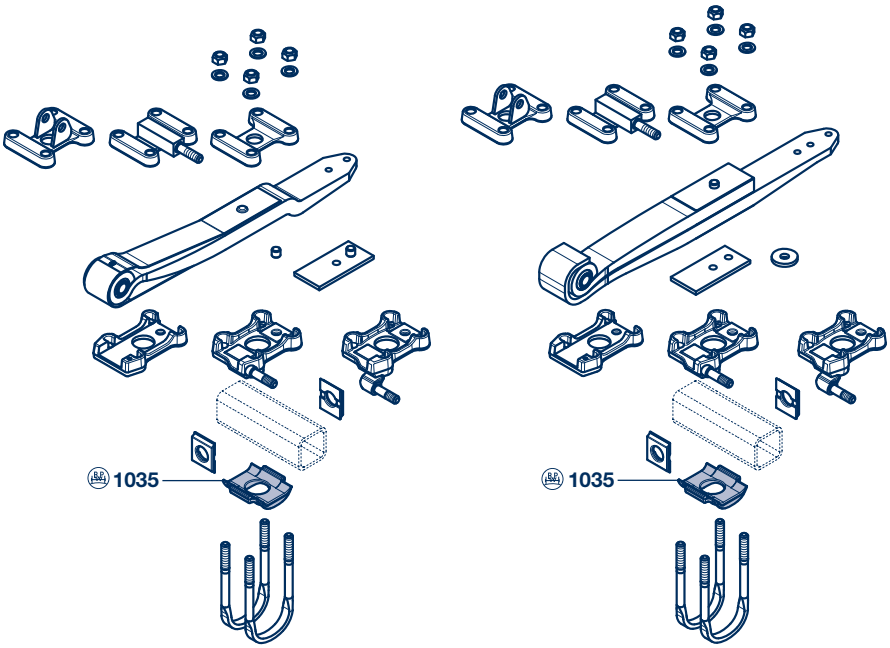

Spring seat arrangements 2

Segments, spring plates 2.3

Double segments 2.3.2

Double segments						
Item	**Designation**	**Applications**	**Leaf spring width (FB)**	**Remark**	**BPW code no.:**	
Double segment						
1035	Segment	☐ **120**	100		03.345.23.15.1	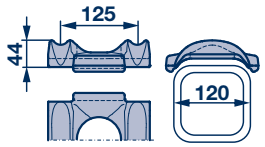
		☐ **120 LL**	100		03.345.23.17.0	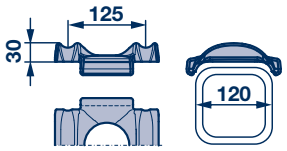
		☐ **120**	100	flattened spring U-bolts (disc brake)	03.345.23.16.1	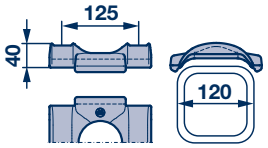
		☐ **150**	100		03.345.25.06.0	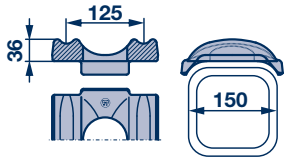
		☐ **150**	100		01.345.25.05.1	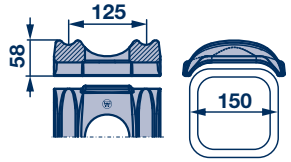

Alternative versions on request.

2 Spring seat arrangements

2.3 Segments, spring plates

2.3.2 Segments

O

SL

AL

Segments (axle plates)

Spring U-bolts mounted from above, spring U-bolt next to the axle beam

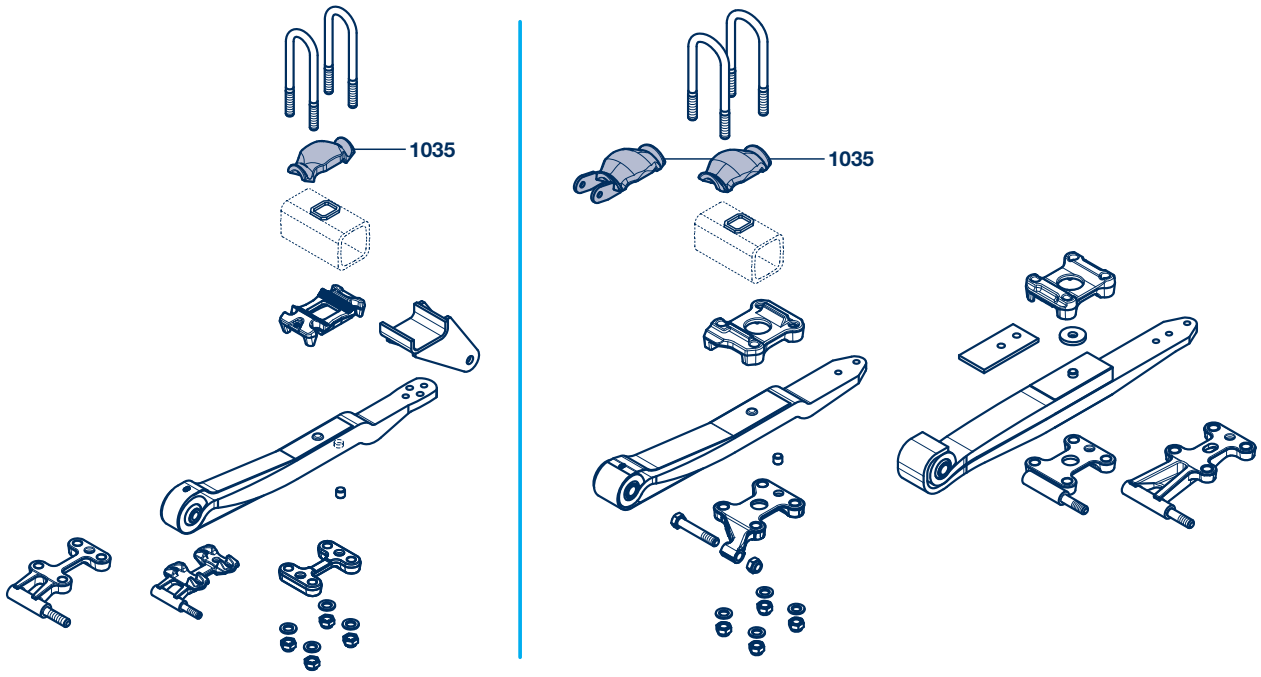

Spring U-bolt mounted below, spring U-bolt next to the axle beam

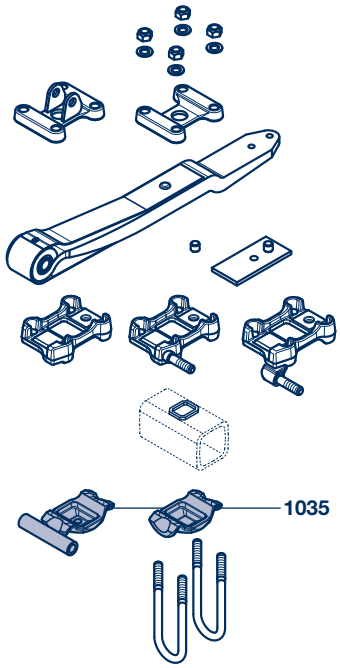

Spring seat arrangements 2

Segments, spring plates 2.3

Segments 2.3.2

Segments (axle plates)						
Item	**Designation**	**Applications**	**Leaf spring width (FB)**	**Remark**	**BPW code no.:**	
Spring U-bolt next to the axle beam						
	Spring plate without shock absorber attachment					
1035	Spring pad	☐ **120**	70	X = 150	03.032.21.63.0	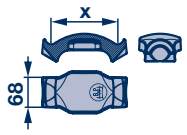
		☐ **120**	70	X = 150	03.032.21.96.0	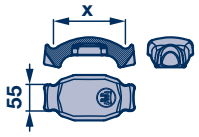
		☐ **120**	100	X = 150	03.032.21.53.0	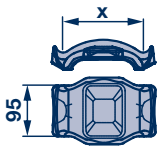
				X = 150	03.032.21.56.0 *	
		☐ **150**	100	X = 180	03.032.11.27.0	
				X = 180	03.032.11.28.0 *	
		* with bore hole Ø 20				
	Spring plate for shock absorber attachment with screws					
1035	Spring pad	☐ **120**	100	B = 144 / x = 150	05.032.21.73.0	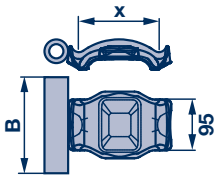
		☐ **120**	100	B = 187 / x = 150	05.032.21.72.0	

Alternative versions on request.

O
SL
AL

2 Spring seat arrangements

2.3 Segments, spring plates

2.3.3 Double segment spring plates

O

SL

AL

Double segment spring plates, trailing arms 100 mm wide

Double segment spring plate above the spring

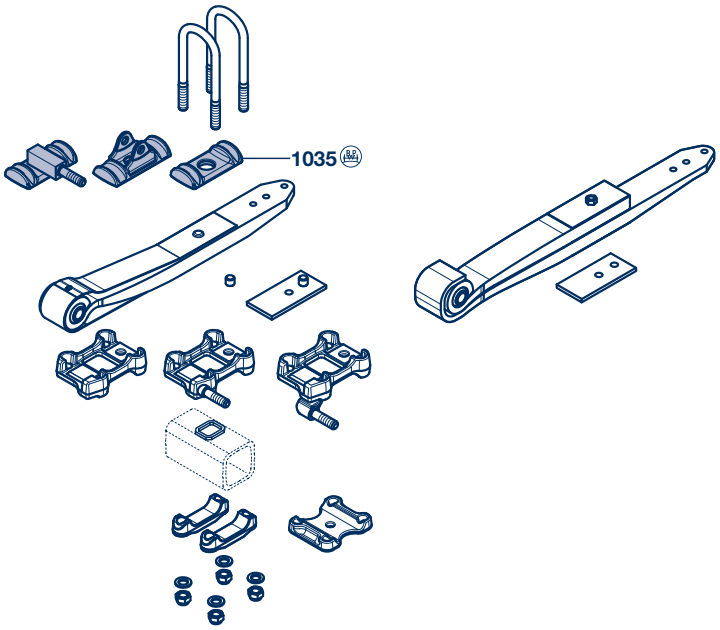

Double segment spring plate below the spring for shock absorber attachment on threaded bolts / U-stabilizer

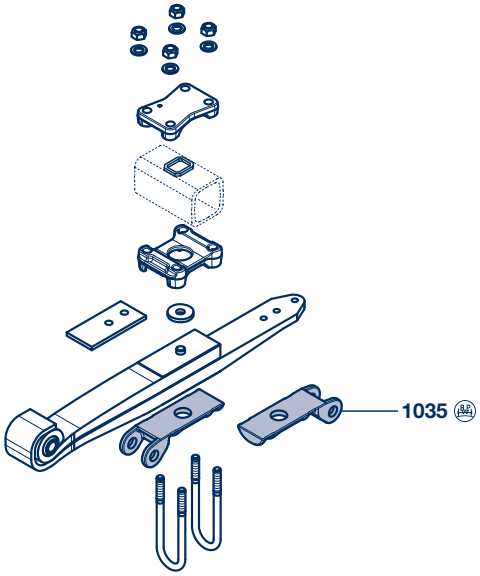

Spring seat arrangements 2

Segments, spring plates 2.3

Double segment spring plates 2.3.3

Double segment spring plates, trailing arms 100 mm wide					
Item	**Designation**	**Applications**	**Remark**	**BPW code no.:**	
	Double segment spring plate above the spring				
1035	Spring plate	☐ **120**	X = 150	03.145.10.39.0	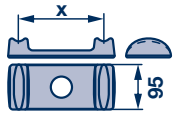
		☐ **150**	X = 180	03.145.10.40.0	
	Double segment spring plate above the spring for shock absorber attachment with screws				
1035	Spring plate	☐ **120 /** ☐ **150**	x = 150 / 180	03.145.10.36.0	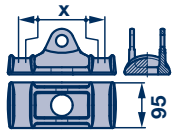
				03.145.10.41.0	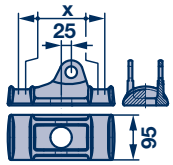
	Double segment spring plate above the spring for shock absorber attachment on threaded bolts				
1035	Spring plate	☐ **120 /** ☐ **150**	x = 150 / 180	05.145.10.42.0	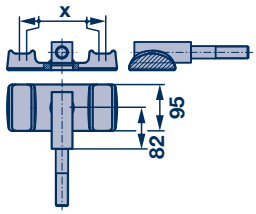
	Double segment spring plate below the spring for shock absorber attachment on threaded bolts / U-stabilizer				
1035	Spring plate	☐ **120 /** ☐ **150**	x = 150 / 180	03.145.10.21.0	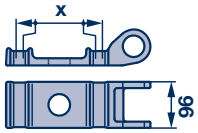

Alternative versions on request.

O
SL
AL

2 Spring seat arrangements

2.3 Segments, spring plates

2.3.4 Spring plates

O

SL

AL

Spring plates

Spring U-bolt mounted below, trailing arms mounted above

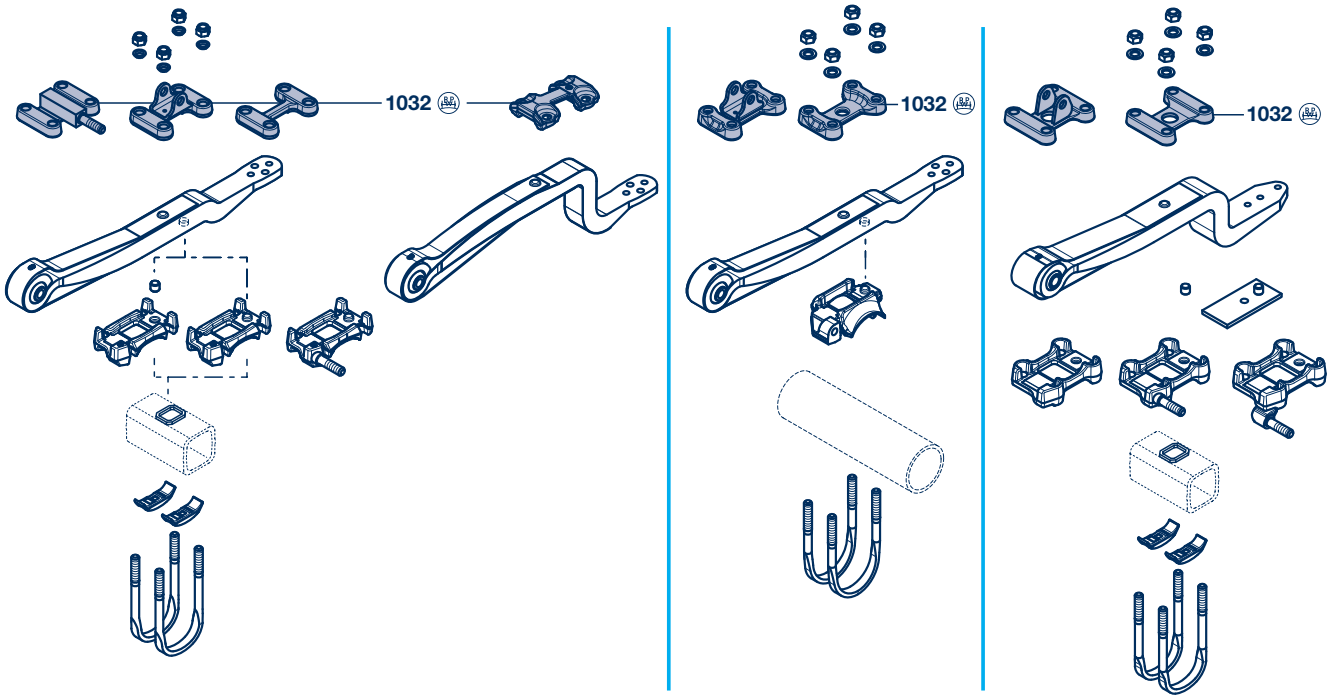

Spring U-bolt mounted above, trailing arms mounted below

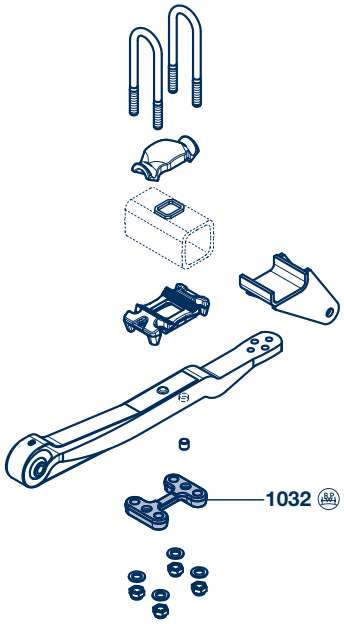

Spring seat arrangements 2

Segments, spring plates 2.3

Spring plates 2.3.4

Spring plates

Item	Designation	Applications	Leaf spring width (FB)	Remark	BPW code no.:	
Spring U-bolt mounted below, trailing arms mounted above / Spring U-bolt mounted above, trailing arms mounted below						
	Spring plate without shock absorber attachment					
1032	Spring plate	☐ **120**	70	A 92 / B 150	03.145.22.77.0 [1]	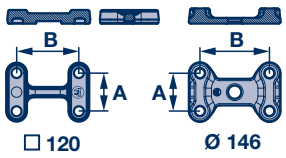
					03.145.25.16.0 [1]	
				with spherical countersink ⇨	**03.145.25.34.0** [2]	
		Ø 146		A 92 / B 169	03.145.23.33.0	
		[2] A repair kit 09.145.25.34.0 consisting of 1x spring plate 03.145.25.34.0 and 4x rings 03.310.10.28.0 is available				
1032	Spring plate	☐ **120**	70	A 92 / B 150	03.145.25.04.0	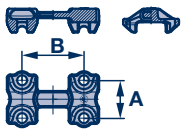
				A 125 / B 150	03.145.25.05.0	
1032	Spring plate	☐ **120**	70	A 92 / B 150	03.145.25.01.0 [1]	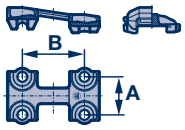
				with spherical countersink ⇨	**03.145.25.17.0**	
1032	Federplatte	☐ **120**	100	A 125 / B 150	03.145.22.01.0	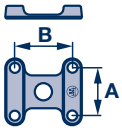
		☐ **150**		A 125 / B 180	03.145.23.27.0	
	Spring plate for shock absorber attachment with screws					
1032	Spring plate	☐ **120**	70	A 92 / B 150	05.145.22.84.0 [1]	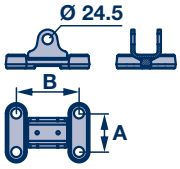
					05.145.25.20.0 [1]	
				with spherical countersink ⇨	**05.145.25.48.0**	
		Ø 146		A 92 / B 169	05.145.25.66.0	
1032	Spring plate	☐ **120**	100	A 125 / B 150	05.145.22.38.0	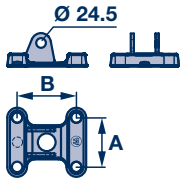
	Spring plate for shock absorber attachment with threaded bolts					
1032	Spring plate	☐ **120**	70	A 92 / B 150	05.145.22.92.0 [1]	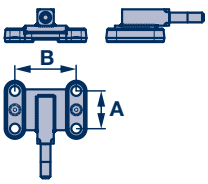
					05.145.25.21.0 [1]	
				with spherical countersink ⇨	**05.145.25.49.0**	
	Spring plate for U-stabilizer attachment with screws					
1032	Spring plate	☐ **120**	100	A 125 / B 150	05.145.22.05.0	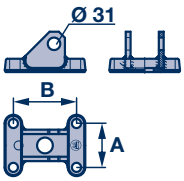
		☐ **150**		A 125 / B 180	05.145.23.08.0 [3]	
		[3] with bore hole for centering bolt Ø 26				
1055	Ring (spherical disc)			Ø 23 / 34 x 7.5	03.310.10.28.0	

[1] No longer available, replaced by spring plate with spherical countersinks and rings 03.310.10.28.0 (see also Chap. 2.5).

Spring plates with weld-on bolt for shock absorber attachment see following pages.

2 Spring seat arrangements

2.3 Segments, spring plates

2.3.4 Spring plates, trailing arms (70 mm) mounted below

O
SL
AL

Spring plates

Trailing arms 70 mm wide

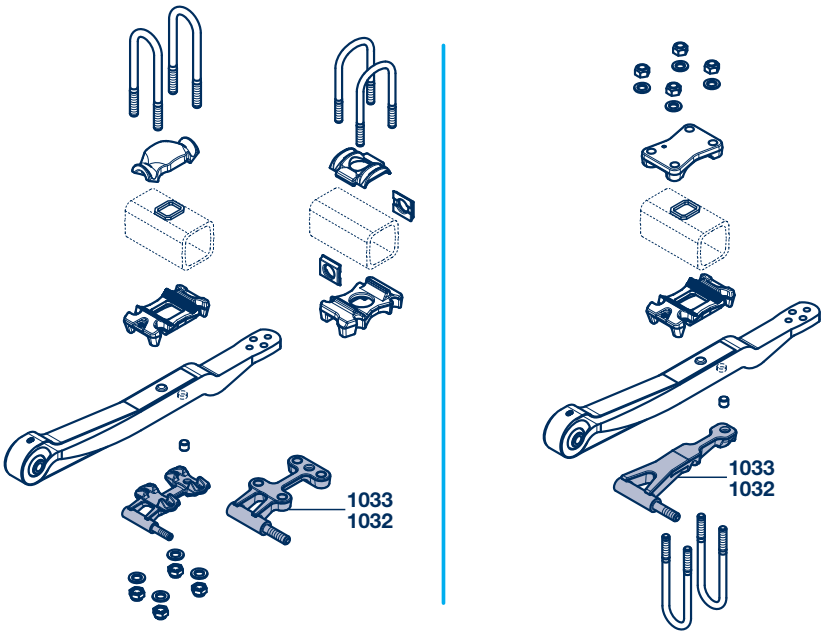

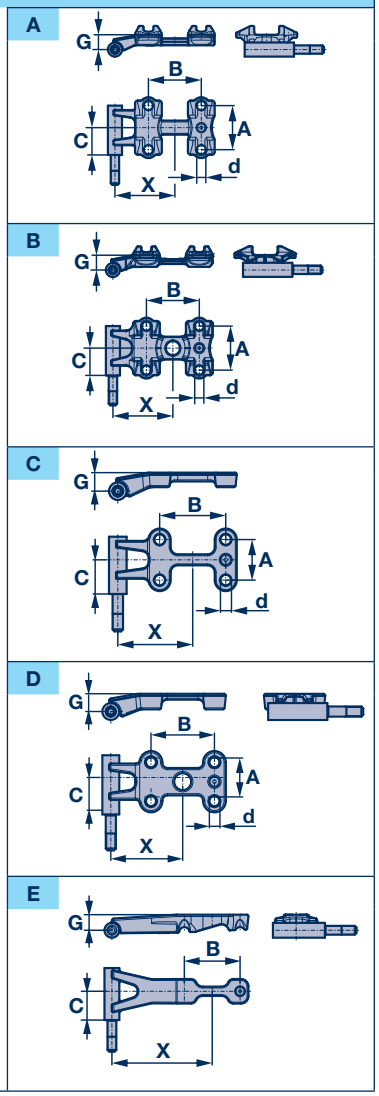

Spring seat arrangements 2

Segments, spring plates 2.3

Spring plates, trailing arms (70 mm) mounted below 2.3.4

Spring plates

Item	Designation	Applications	FB	Fig.	Dimension A	B	d	C	X	G	V	BPW code no.:
Spring plate for shock absorber attachment												
1032 1033	Spring plate, right Spring plate, left	☐ 120	70	A	125	150	Ø 26	77.5	170	42	-	05.145.25.06.0 05.145.25.07.0
				B	125	150	Ø 26	77.5	170	42	-	05.145.25.46.0 05.145.25.47.0
				C	92	150	Ø 24	77.5	170	42	-	05.145.22.80.0 05.145.22.81.0
				D	92	150	Ø 24	77.5	270	42	-	05.145.25.40.0 05.145.25.41.0
				C	92	150	Ø 24	77.5	270	42	-	05.145.22.82.0 05.145.22.83.0
				D	92	150	Ø 24	77.5	270	42	-	05.145.25.42.0 05.145.25.43.0
				E	-	150	-	77.5	270	42	-	05.145.25.18.0 05.145.25.19.0

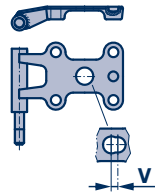

Repair guide!

Spring plates (right or left) are changed if shock absorber is rear, this means spring plate right (shock absorber front) = spring plate left (shock absorber rear).

Shock absorber front

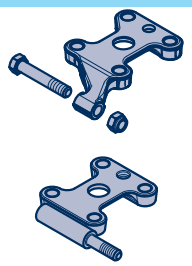

front right

Shock absorber rear

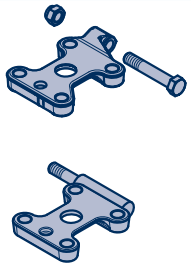

rear left

2 Spring seat arrangements

2.3 Segments, spring plates

2.3.5 Spring plates, trailing arms (100 mm) mounted below

O

SL

AL

Spring plates

Trailing arms 100 mm wide

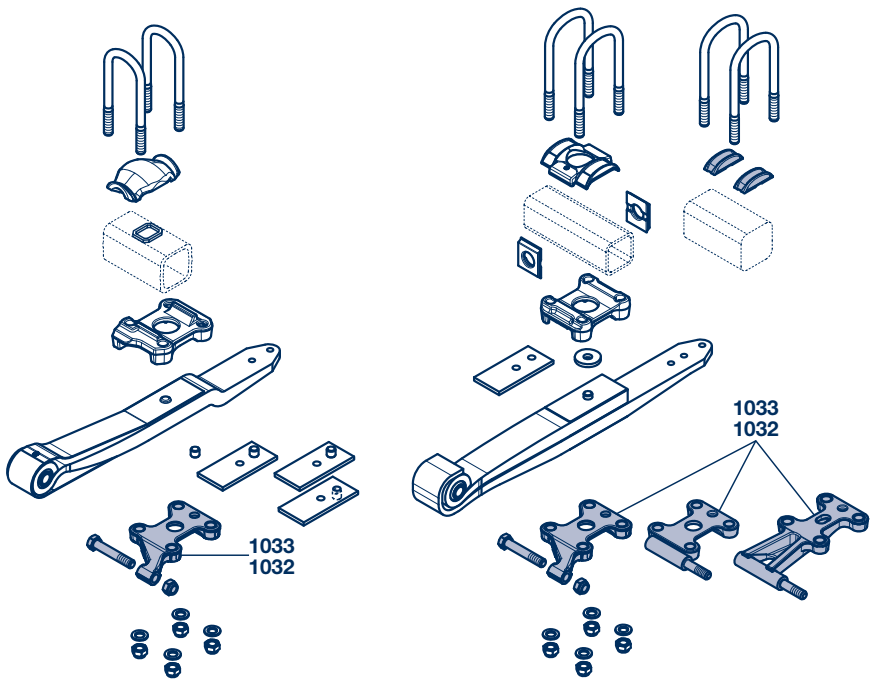

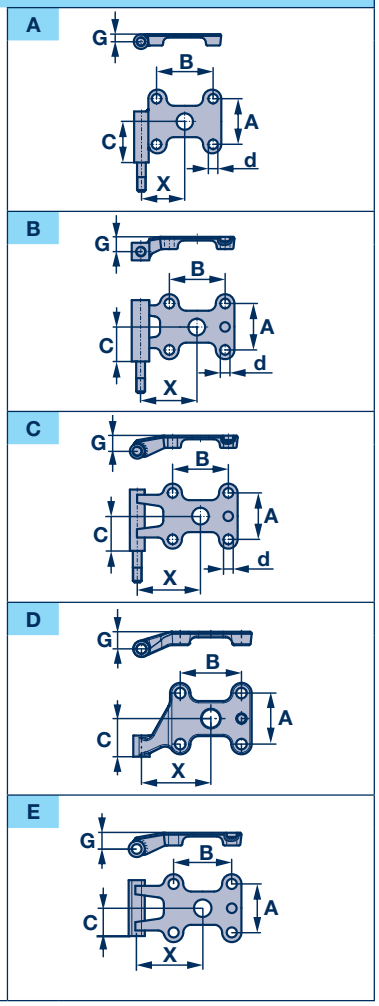

Spring seat arrangements 2

Segments, spring plates 2.3

Spring plates, trailing arms (100 mm) mounted below 2.3.5

Spring plates

Item	Designation	Applications	FB	Fig.	Dimension A	B	d	C	X	G	V	BPW code no.:
Spring plate for shock absorber attachment												
1032 1033	Spring plate, right Spring plate, left	☐ 120	100	A	125	150	Ø 26	93.5	119	21	-	05.145.22.08.0 05.145.22.09.0
				B	125	150	Ø 26	93.5	146.5	38	-	05.145.22.50.0 05.145.22.49.0
				C	125	150	Ø 26	72	170	42	-	05.145.22.68.0 * 05.145.22.69.0 *
				C	125	150	Ø 26	93.5	170	42	-	05.145.22.44.0 1) 05.145.22.43.0 1)
				D	125	150	Ø 26	93.5	170	42	-	05.145.25.22.0 05.145.25.23.0
				E	125	150	Ø 26	93.5	169	42	-	05.145.22.57.0
				C	125	150	Ø 26	93.5	170	42	20	05.145.22.46.0 05.145.22.47.0
				~ B	125	150	Ø 26	93.5	210	42	15	05.145.22.94.0 05.145.22.93.0
				~ B	125	150	Ø 26	93.5	250	42	15	05.145.22.64.0 05.145.22.65.0
		☐ 150	100	A	125	180	Ø 26	93.5	134	21	-	05.145.23.28.0 05.145.23.29.0
				A	125	180	Ø 26	93.5	134	21	20	05.145.23.20.0 05.145.23.19.0
				~ A	125	180	Ø 26	93.5	158.5	30	-	05.145.00.08.0 05.145.00.07.0

* Shock absorber bolt Ø 28 (standard Ø 24)

1) Replaced by 05.145.25.22.0 / 23.0 (shock absorber attachment with screw and lock nut).
Screw and lock nut are included in spring plate 05.145.....

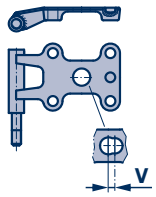

Attention!	Shock absorber front	Shock absorber rear
Spring plates (right or left) are changed if shock absorber is rear, this means spring plate right (shock absorber front) = spring plate left (shock absorber rear).	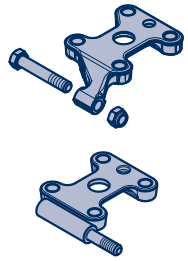	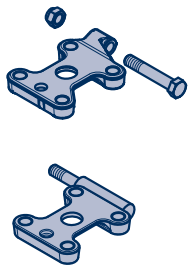
	front right	rear left

2 Spring seat arrangements

2.4 Centering bolts, tracking plates

O

SL

AL

Centering bolts, tracking plates

Single leaf trailing arm without spring bolt (SLO / SLM / SLU / ALO / ALM / ALU)

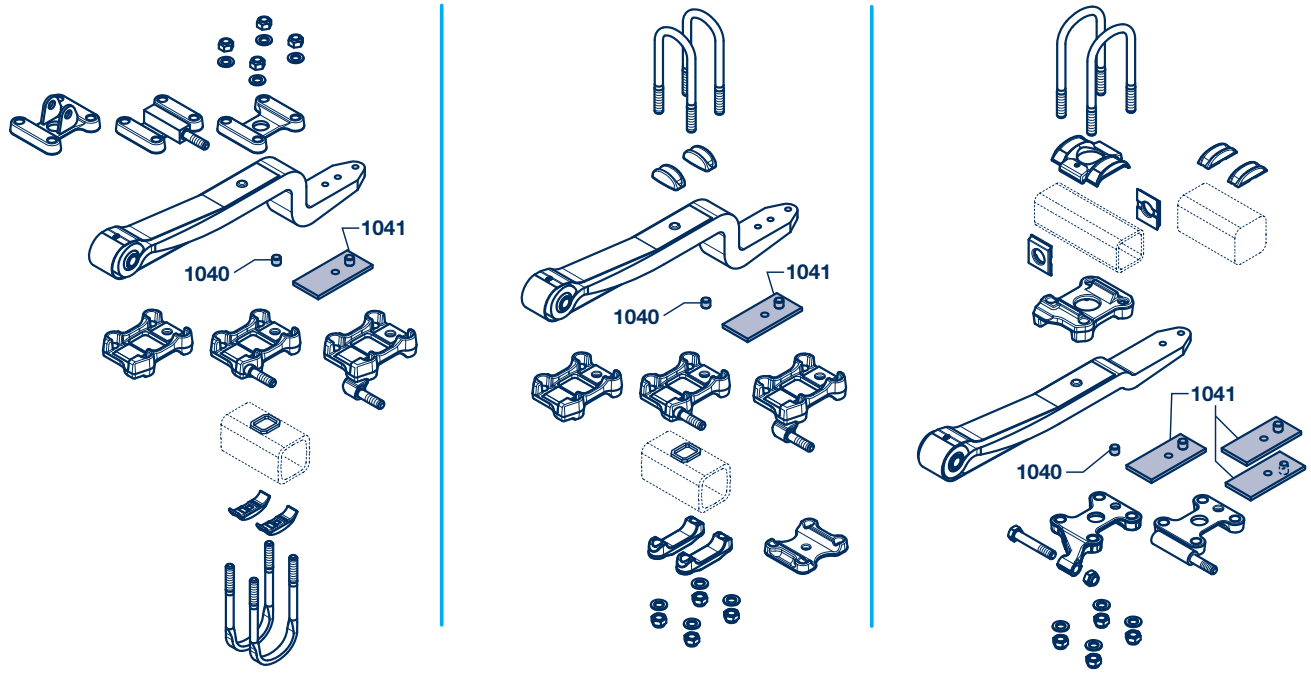

Double leaf trailing arm / single leaf trailing arm with spring bolt (O / OM / OT / SLO / SLM / SLU / ALO / ALM / ALU)

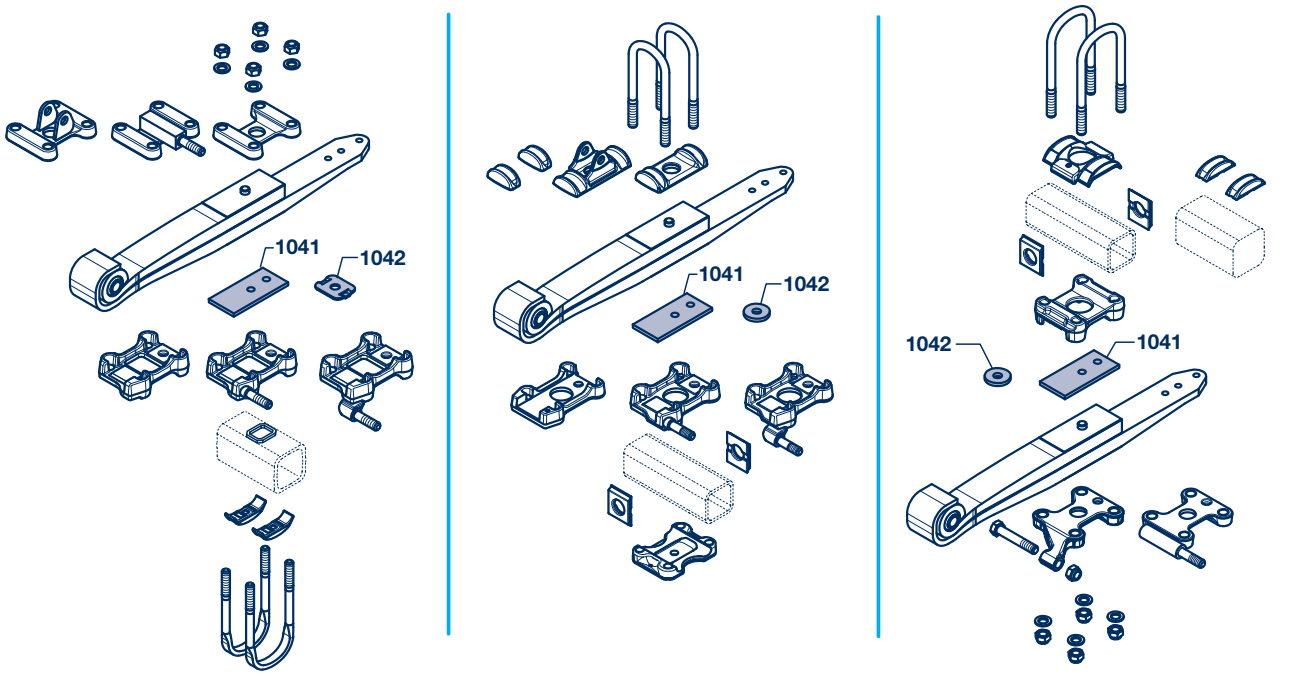

Spring seat arrangements 2

Centering bolts, tracking plates 2.4

Centering bolts, tracking plates

Item	Designation	Applications	Dimension	BPW code no.:	
Single leaf trailing arm without spring bolt (SLO / SLM / SLU / ALO / ALM / ALU)					
	Centering bolt				
1040	Bolt (centering bolt)		Ø 24 x 23	03.084.74.43.0	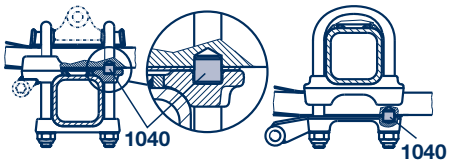
	Tracking plates				
1041	Plate (tracking plate)	☐ **120**	218 x 98 x 5	05.281.36.20.0	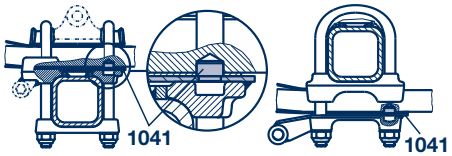
		☐ **120**	235 x 98 x 5	**05.281.36.15.0**	
		☐ **120**	235 x 98 x 5	05.281.36.18.0	
		☐ **150**	260 x 98 x 5	05.281.37.16.0	
		☐ **150**	265 x 98 x 5	05.281.37.19.0	
Double leaf trailing arm / single leaf trailing arm with centre bolt (O / OM / OT / SLO / SLM / SLU / ALO / ALM / ALU)					
	Tracking plates				
1041	Plate (tracking plate)	☐ **120**	235 x 98 x 5	**03.281.36.14.0**	
		☐ **120**	235 x 98 x 5	03.281.36.16.0	
		☐ **150**	260 x 98 x 5	03.281.37.15.0	
		☐ **150**	275 x 98 x 5	03.281.37.18.0	
	Centering ring, trailing arm mounted above, trailing arms mounted below, spring seat with round hole, round centering ring				
1042	Washer (centering ring)		Ø 24 / 69 x 4	03.320.33.22.0	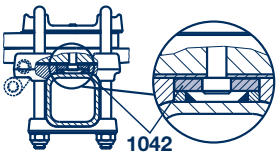
	Centering ring, trailing arms mounted below, axle plates with round hole				
1042	Washer (centering ring)		Ø 24 / 69 x 10	03.320.33.25.0	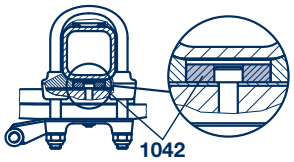
			Ø 24 / 71 x 10	03.320.34.50.0	
	Centering plate, trailing arm mounted above, axle plates with square hole, axle with square centering ring				
1042	Plate (centering plate)		Ø 24 / 73 / 60 x 5	03.281.33.07.0	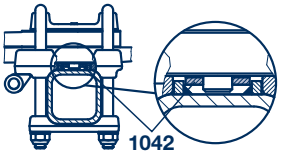
			Ø 24 / 90 / 55 x 5	03.281.34.10.0	
			Ø 24 / 90 / 72 x 5	**03.001.35.04.0**	

2 Spring seat arrangements

2.5 Spring U-bolts

2.5.1 Spring U-bolts, trailing arms 70 mm wide

AL

Spring U-bolts, trailing arms 70 mm wide

Spring U-bolt next to the axle beam

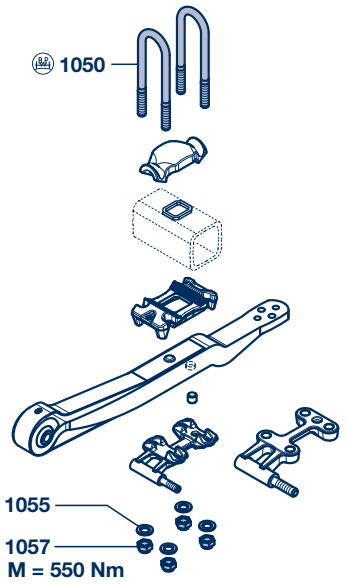

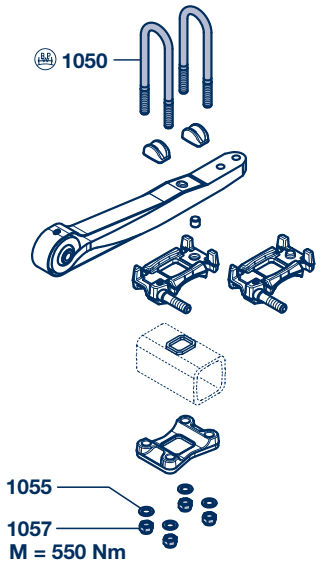

Spring U-bolt encloses the axle beam

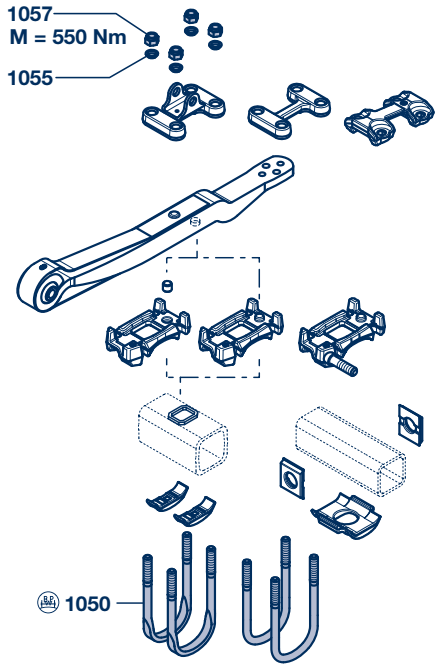

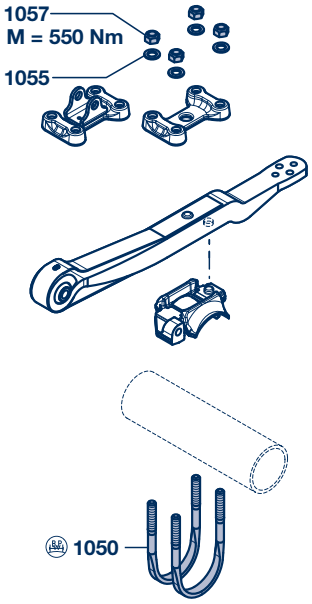

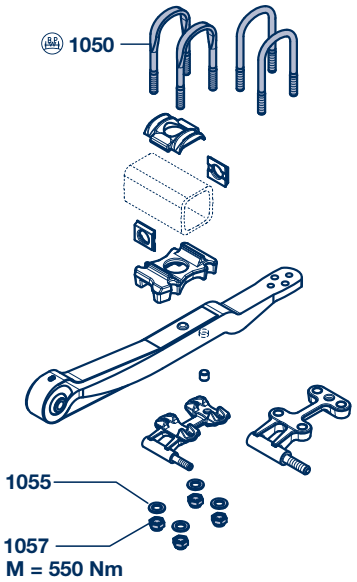

Spring seat arrangements 2

U-bolts 2.5

Spring U-bolts, trailing arm 70 mm wide 2.5.1

AL

Spring U-bolts, trailing arms 70 mm wide

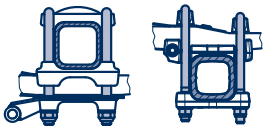

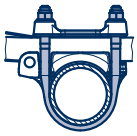

		Spring U-bolt next to the axle beam				Spring U-bolt encloses the axle beam					
		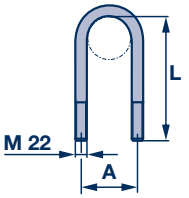		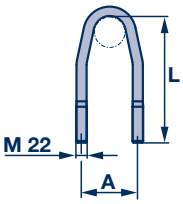		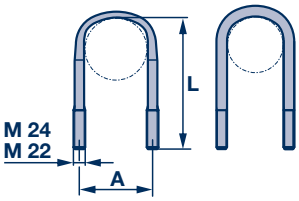			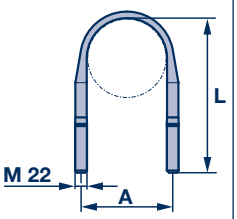		
		A = 92 □ 120		A = 92 □ 120		A = 150 □ 120			A = 169 Ø 146		
Item	**Designation**	**BPW code no.:**	**L**		**L**		**L**	**Remark**		**L**	
1050	U-bolts	**M 22**									
		03.138.30.07.4	280	03.138.30.19.4	284	03.138.37.05.4	256	flattened	03.138.37.22.4	285	
		03.138.30.08.4	295			03.138.37.04.4	260	flattened			
						03.138.37.06.4	264	flattened			
						03.138.37.03.4	283	flattened			
						03.138.37.11.4	283	round			
						03.138.37.10.4	289	round			
						03.138.37.02.4	289	flattened			
						03.138.37.12.4	295	round			
		M 24									
		-		-		03.138.41.38.4	277	flattened	-		
						03.138.41.33.4	285	flattened			
						03.138.41.34.4	300	flattened			
						03.138.41.35.4	325	flattened			

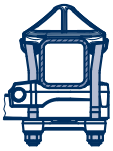

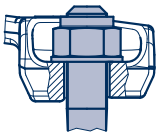

Spring U-bolts without spherical countersink (with washer)

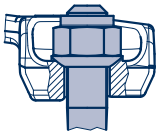

Spring plate with spherical countersink (with spherical disc)

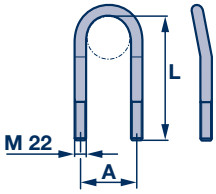
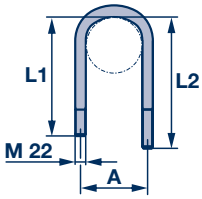

A = 92 □ 120	L	A = 150 □ 120	L1 / L2	Remark
03.138.30.18.4	258	03.138.37.09.4	245 / 267	flattened
		03.138.37.17.4	240 / 262	round

Item	Designation	Dimension	BPW code no.:
1055	Washer	Ø 23 / 125	02.5401.23.07
1055	Ring (spherical disc)	Ø 23 / 34 x 7.5	**03.310.10.28.0** *
1057	Lock nut	M 22 / SW 32 / H 22	03.260.04.19.0

* Spherical disc for spring plate with spherical countersink

2 Spring seat arrangements

2.5 Spring U-bolts

2.5.2 Spring U-bolts, trailing arms 100 mm wide

O
SL
AL

Spring U-bolts M 24, trailing arms 100 mm wide

Spring U-bolt next to the axle beam

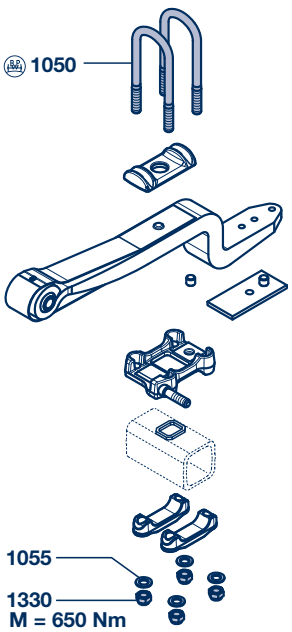

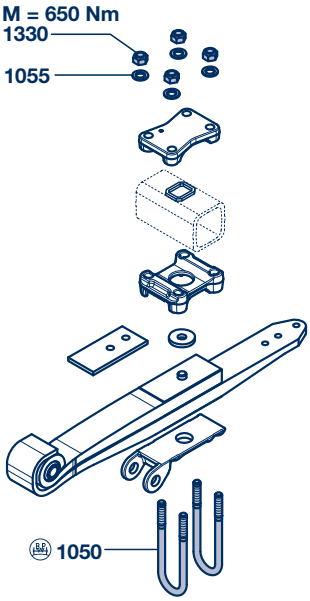

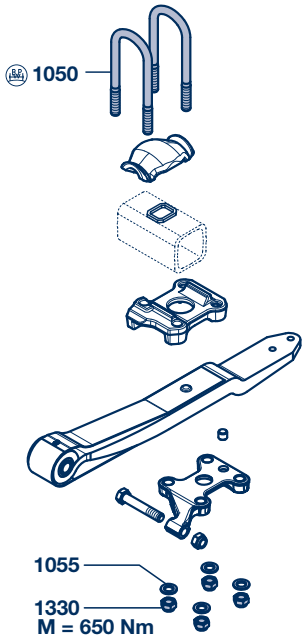

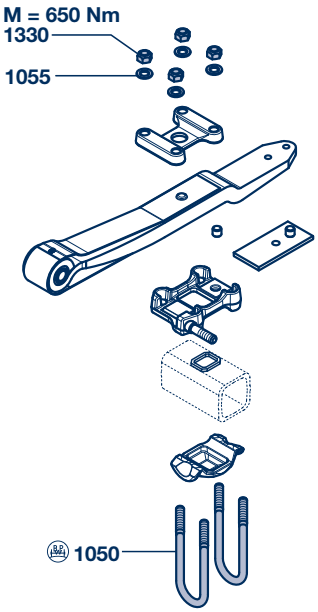

Spring U-bolt encloses the axle beam

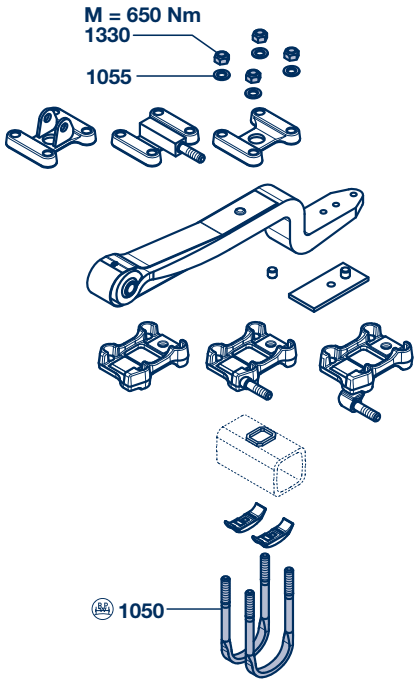

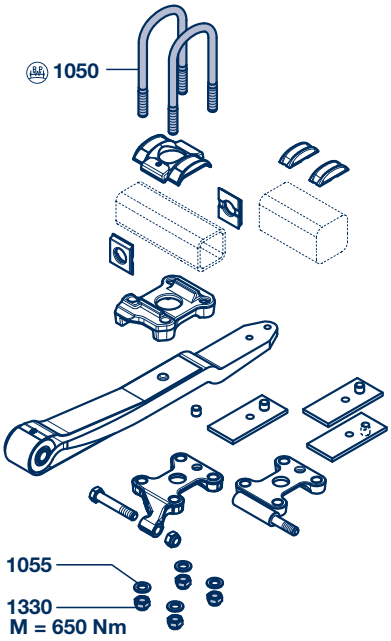

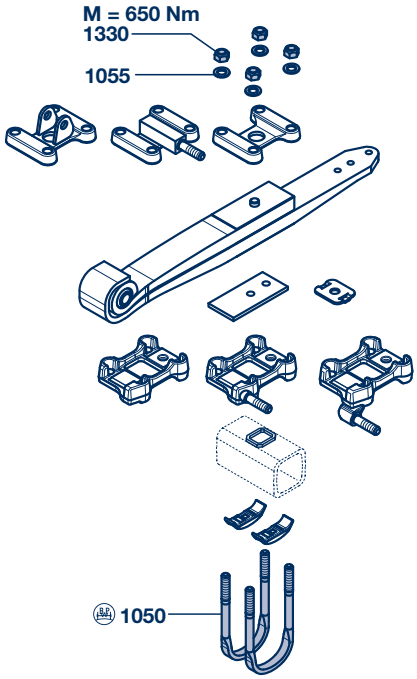

Spring seat arrangements 2

U-bolts 2.5

Spring U-bolts, trailing arms 100 mm wide 2.5.2

Spring U-bolts M 24, trailing arms 100 mm wide

	Spring U-bolt next to the axle beam		Spring U-bolt encloses the axle beam							
	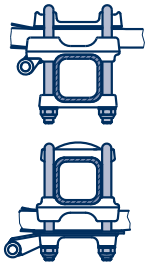		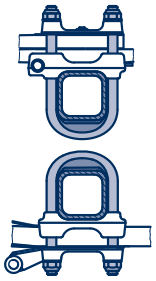		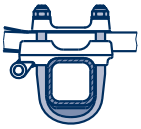		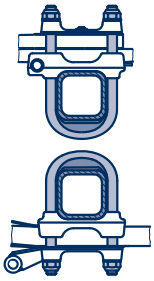		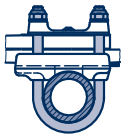	
	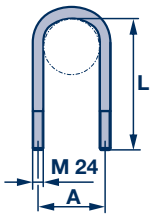				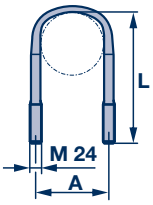		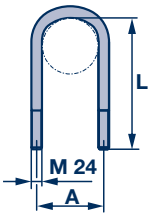		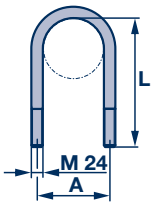	
	A = 125 ☐ 120 / ☐ 150		A = 152 ☐ 120		A = 152 Disc brake ☐ 120		A = 180 ☐ 150		A = 152 Ø 127	
L	**BPW code no.:**	**L**								
190	-		03.138.41.31.4	190	-		-		-	
210	03.138.44.17.4	210	03.138.41.32.4	210	-		-		-	
230	03.138.44.21.4	230	-		-		-		-	
250 - 255	03.138.44.14.4	255	-		-		03.138.45.20.4	250	-	
260 - 277	03.138.44.19.4	270	03.138.41.01.4	268	03.138.41.38.4	277	-		03.138.41.21.4	275
280 - 285	03.138.44.08.4	280	03.138.41.19.4	280	03.138.41.33.4	285	-		03.138.41.18.4	280
	03.138.44.40.4 *	280	-		-		-			
290 - 295	03.138.44.16.4	292	03.138.41.17.4	290	-		-		03.138.41.14.4	290
	03.138.44.44.4 *	292	-		-		-		-	
300 - 305	03.138.44.04.4	301	03.138.41.13.4	300	03.138.41.34.4	300	-		-	
308 - 310	03.138.44.09.4	308	03.138.41.16.4	310	-		-		03.138.41.11.4	310
	03.138.44.41.4 *	308	-		-		-		-	
315 - 320	03.138.44.15.4	320	03.138.41.08.4	320	03.138.41.37.4	315	03.138.45.11.4	320	-	
	03.138.44.42.4 *	320	-		-		-		-	
325 - 335	03.138.44.02.4	331	03.138.41.26.4	330	03.138.41.35.4	325	03.138.45.09.4	330	03.138.41.10.4	335
	03.138.44.43.4 *	331	-		-		-		-	
340 - 345	03.138.44.18.4	340	03.138.41.05.4	345	03.138.41.36.4	345	03.138.45.19.4	340	-	
350 - 356	03.138.44.01.4	356	03.138.41.23.4	355	-		03.138.45.08.4	350	03.138.41.09.4	355
360 - 365	-		03.138.41.06.4	365	-		03.138.45.07.4	360	-	
370	03.138.44.12.4	370	-	-	-		03.138.45.22.4	370	-	
380	-		-	-	-		03.138.45.06.4	380	-	
400	03.138.44.25.4	400	-	-	-		-		-	
415	-		03.138.41.29.4	415	-		-		-	

Item	Designation	Dimension	BPW code no.:
1055	Washer	Ø 25 / 127	02.5401.25.07
1330	Lock nut	M 24 / 980-10	02.5220.74.12

* SLU with TS2 3709 / TSB 3709

Alternative versions on request.

2 Spring seat arrangements

2.5 Spring U-bolts

2.5.3 Spring U-bolts, hexagon screws

O
SL
AL

Hexagon screws M 24

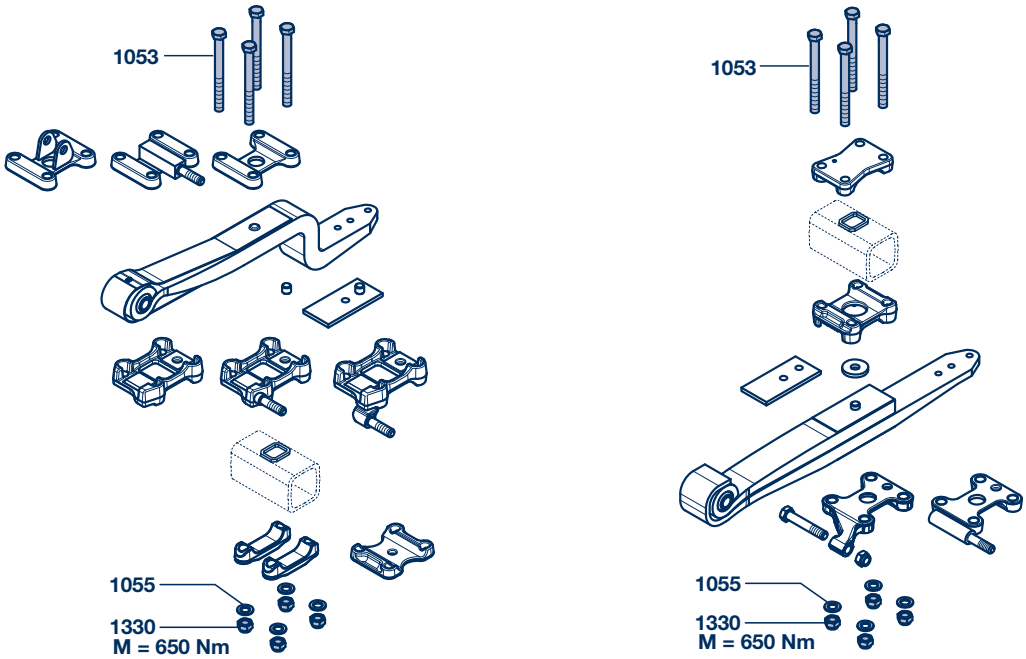

Item	Designation	Utilisation	X	Dimension	BPW code no.:	
1053	Hexagon screw	☐ 120	38 - 45	M 24 x 270	02.5023.45.11	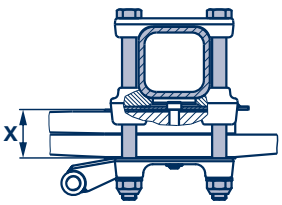
			43 - 54	M 24 x 280	02.5023.89.10	
			65 - 79	M 24 x 300	02.5024.11.16	
			80 - 99	M 24 x 320	02.5023.88.10	
			100 - 13	M 24 x 350	02.5023.94.10	
		☐ 150	50 - 69	M 24 x 320	02.5023.88.10	
			60 - 95	M 24 x 340	02.5023.99.11	
			70 - 104	M 24 x 350	02.5023.94.10	
			100 - 135	M 24 x 380	02.5023.98.10	
1055	Washer			Ø 25 / 127	02.5401.25.07	
1330	Lock nut			M 24 / 980-10	02.5220.74.12	

Notes

2 Spring seat arrangements

2.6 Assembly instructions for clamped axle spring seat arrangements

AL

Trailing arms 70 mm wide (AL II), spring U-bolts M 2

ALO / ALM series - Square axle beam

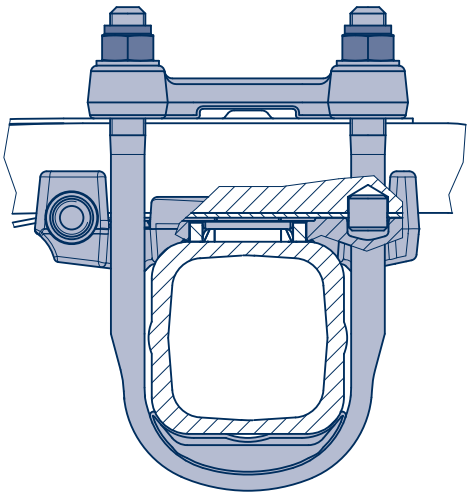

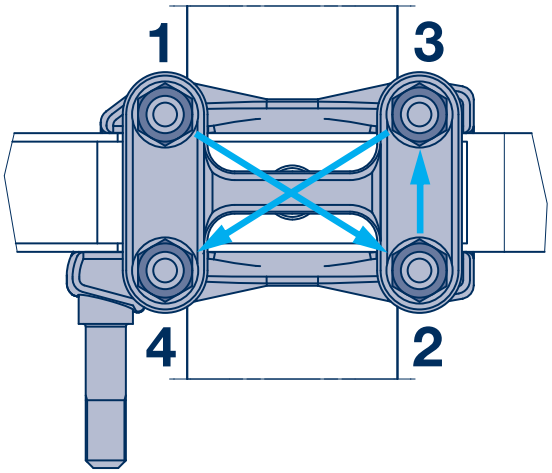

ALO / ALM series - Round tube axle beam Ø 146

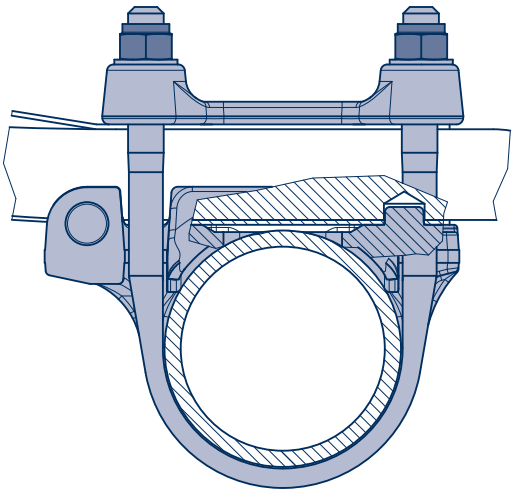

ALU series

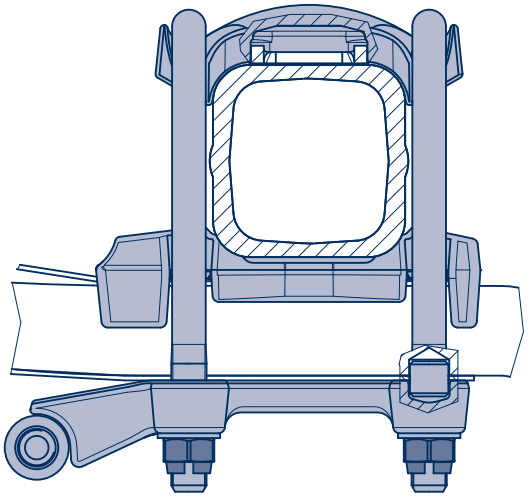

Assembly instructions:

- Assemble components according to the adjacent illustration, grease spring U-bolts beforehand.
- Axle plates and trailing arms are to be aligned parallel to the axle beam and the lock nuts are to be tightened down diagonally and equally.
- Control parallel position of axle plates and trailing arms towards the axle beam and tighten self-locking nuts diagonally in a.m. sequence 1-2-3-4 until all have achieved a tightening torque of 200 Nm.

  Using a torque wrench tighten self-locking nuts diagonally in following steps to the tightening torque of 550 Nm:

  1) 200 Nm s.a.
  2) 300 Nm
  3) 450 Nm
  4) 550 Nm
- As the last step, turn all lock nuts through a further 90°.

M = 550 Nm + 90°

Spring seat arrangements 2

Assembly instructions for clamped spring seat arrangements 2.6

Trailing arms 100 mm wide (SL / AL), spring U-bolts M 24

SLO / SLM / ALO / ALM series

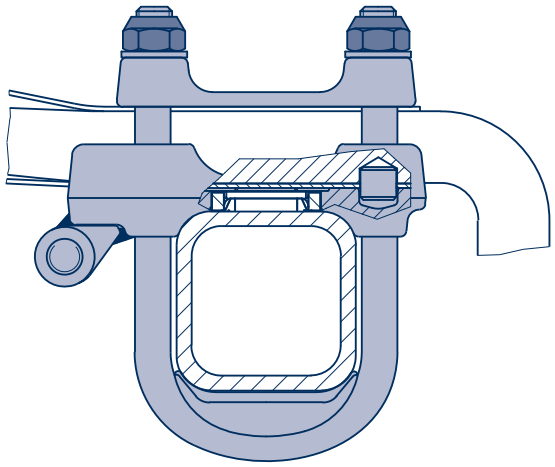

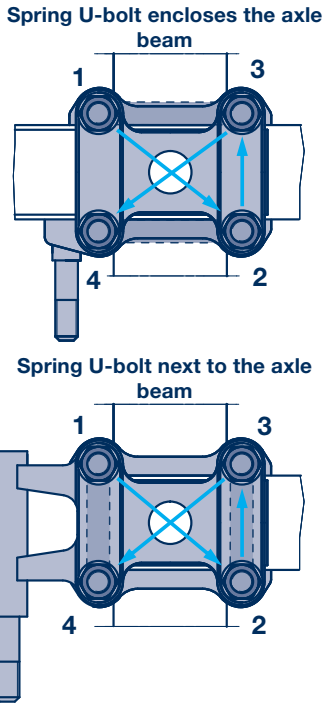

SLU / ALU series

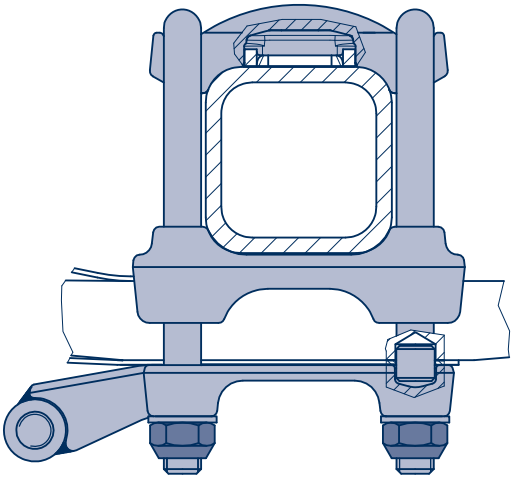

Assembly instructions:

- Assemble components according to the adjacent illustration, grease spring U-bolts beforehand.
- Axle plates and trailing arms are to be aligned parallel to the axle beam and the lock nuts are to be tightened down diagonally and equally until all components are in uniform contact (the spring seats are only in contact with the radius of the axle beam).

  There must be no uneven tensioning due to one-sided tightening of the lock nuts.
- Using a torque wrench, tighten the lock nuts in several stages diagonally until the specified tightening torque has been reached.

M = 650 Nm (605 - 715 Nm)

3 Spring pivot bolt bearings

General

O

SL

AL

Spring pivot bolt bearings

BPW Spring pivot bolt bearings connect the trailing arms to the hanger bracket / frame.

The maintenance-free steel / rubber / steel bushes guarantee that the axles are guided securely and with a stable track under all conditions.

In axle lift devices, the mounting of the lifting arm is integrated into the spring pivot bolt bearing, thereby ensuring a safe and long-life function.

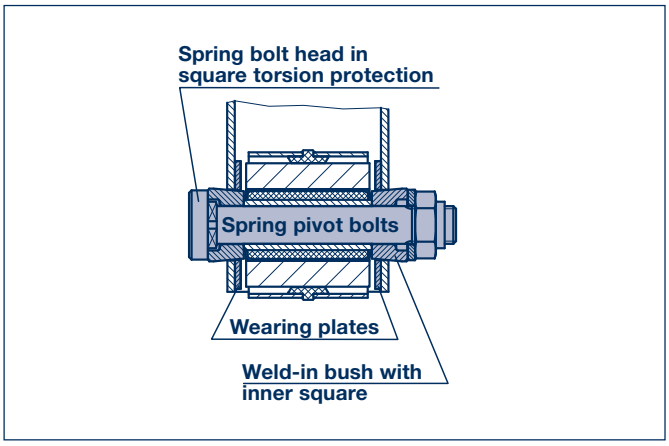

Rapid axle alignment is possible using BPW hanger brackets with integrated track adjustment: Without having to loosen the spring U-bolt, production tolerances on the vehicle can be equalised or wheelbases corrected (axle tracking).

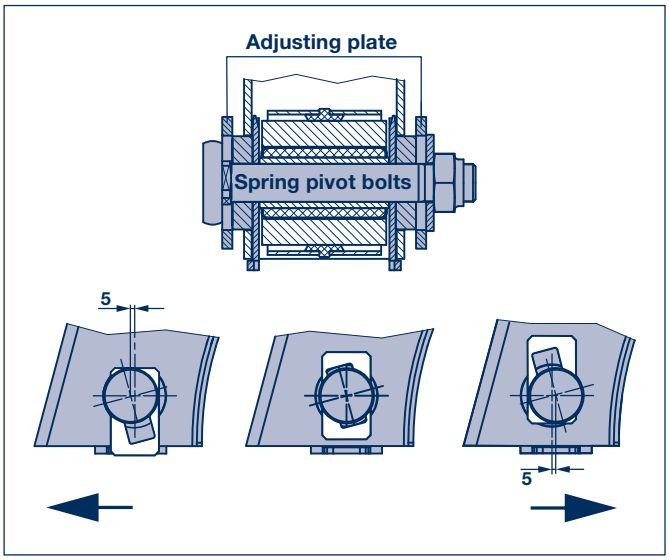

Spring bolt with square torsion protection

Since 1995, BPW has been using spring bolts and weld-in bushes with square torsion protection on rigid steel supports.

In case of wear on bushes with a slot for the hexagon head of the spring bolt that are welded into older supports, change over to the new technology with square torsion protection (see Chap. 7.2.1).

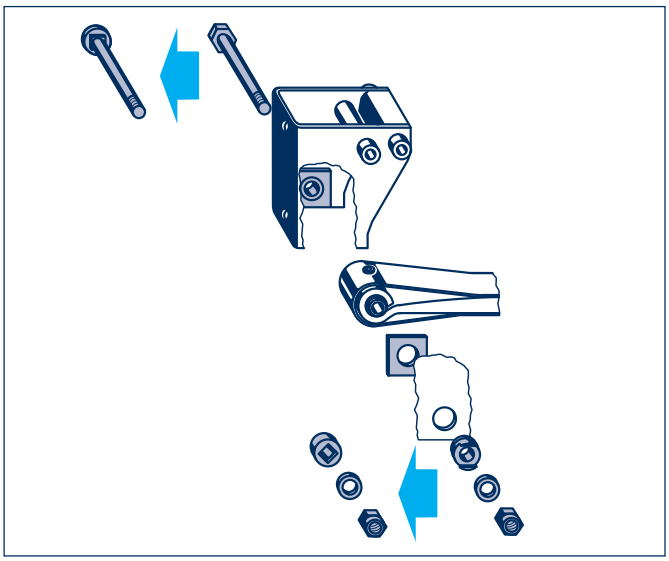

Spare parts for ECO Air (EA) air suspensions see Chap. 11.

Spare parts for ECO Air COMPACT (AC) air suspensions see Chap. 12.

Spring pivot bolt bearings 3

General

Spring pivot bolt bearing from week 18/2004 onwards

From week 18/2004 onwards, the functional principle of the loose wearing plates familiar in Airlight II hanger brackets was also be carried across to the rigid air suspension hanger brackets for 100 mm wide trailing arms.

Loose wearing plates offer the following advantages:

- Simplified mounting, because the wearing plates are not inserted in the hanger bracket until the trailing arm has been positioned in the bracket.

  This means there is significantly more installation space available at the start of the installation procedure.

  Preinstalled air suspension modules can therefore be installed in the vehicle frame much easier thanks to the hanger brackets which are already welded on.
- A practical design of the wearing plates thanks to the insertion offset and height limitation ensures that the installation proceeds smoothly.
- Mixed installation is technically possible (hanger brackets with loose wearing plates or with welded wearing plates).

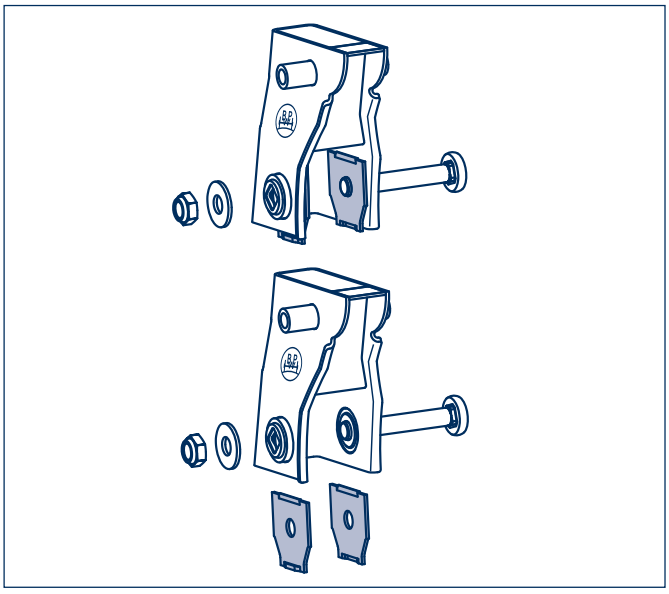

Wearing plates

BPW uses two different versions of wearing plates.

1. A straight shaped plate for straight hanger brackets, channel cross members and frames

   BPW Code no.: 03.164.35.04.0 - M 24
   03.164.35.01.0 - M 30
2. An offset shaped plate for angled hanger brackets

   BPW Code no.: 03.164.35.03.0 - M 24
   03.164.35.02.0 - M 30

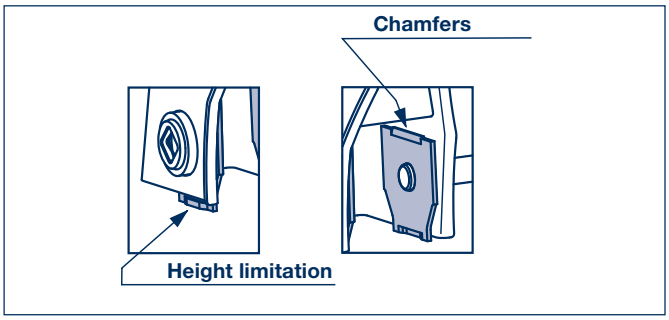

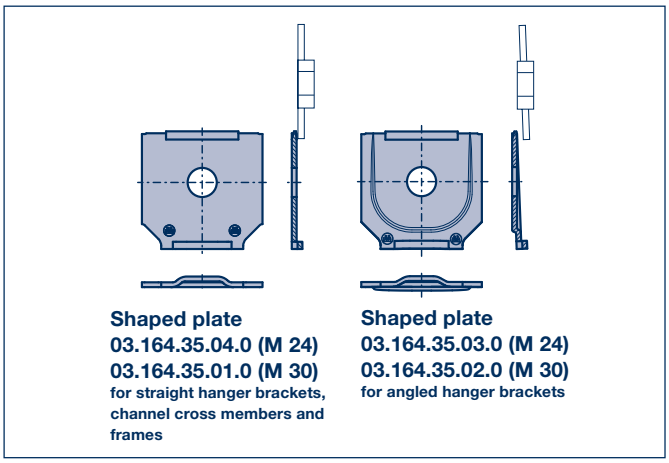

Spring bolt Ø 24 mm (AL series)

Since week 30/2007 BPW air suspension kits (Airlight II) were only available with **Ø 24** mm trailing arm bushes and spring bolts.

Introducing an **M 24** spring bolt provides greater security due to higher bolt tension being achieved while increasing the contact surfaces within the screwed joint.

The tightening torque is reduced from **900 Nm** (840 - 990 Nm) for the **M 30** spring bolt to **650 Nm** (605 - 715 Nm) for the **M 24** spring bolt.

Spring bolt Ø 30 (SL series)

From spring 2019, the spring bolt gland on BPW air suspension kits in series SL will be changed over from **M 30** to **M 30 x 2**.

The introduction of a **M 30 x 2** spring bolt causes the preload to increase while the tightening torque remains constant.

3 Spring pivot bolt bearings

3.1 Spare parts for spring pivot bolt bearings

O
SL
AL

Spare parts for spring pivot bolt bearings

A

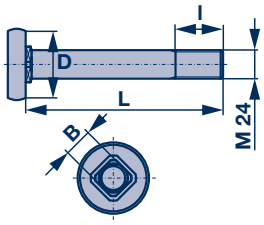

B

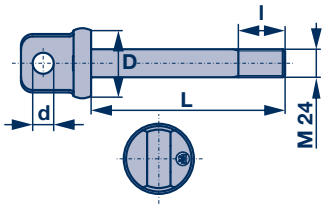

C

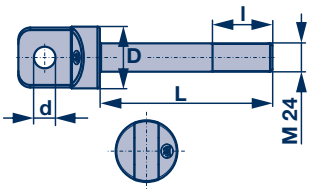

D

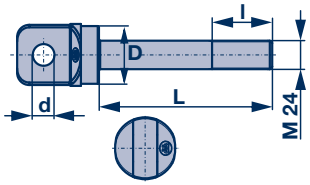

E

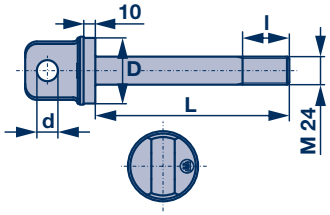

F

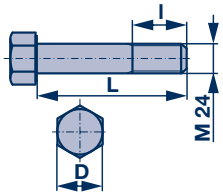

G

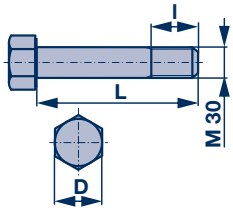

H

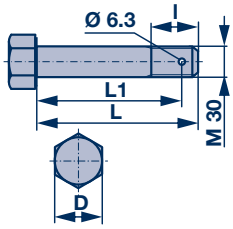

I

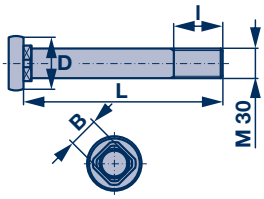

J

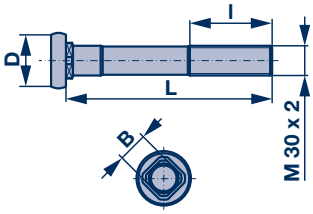

K

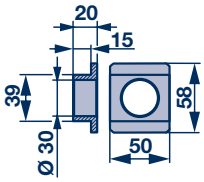

L

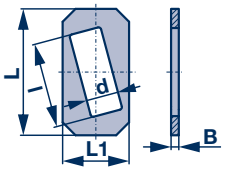

M

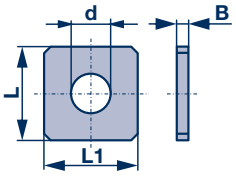

M

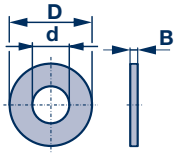

O

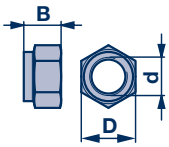

P

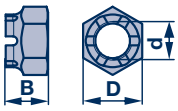

Spring pivot bolt bearings 3

Spare parts for spring pivot bolt bearings 3.1

Spare parts for spring pivot bolt bearings

Item	Designation	Fig.	Dimension	L	L1	l	D	d	B	BPW code no.:
1154 1155	Screw (spring bolt)	C	M 24 x 144	144	-	50	Ø 51.5	Ø 18	-	03.340.14.30.0
		D	M 24 x 144	144	-		Ø 48		-	03.340.14.31.0
		A	M 24 x 166	166	-	40	Ø 56	-	☐ 24	03.340.14.20.0
		B	M 24 x 166	166	-		Ø 56	Ø 18	-	03.340.14.24.0
		E	M 24 x 166	166	-		Ø 54		-	03.340.14.28.0
		A	M 24 x 180	180	-		56	-	☐ 24	03.340.14.23.0
			M 24 x 200	200	-			-		03.340.14.27.0
		F	M 24 x 210	210	-	45	SW 36	-	-	03.340.14.29.0
			M 24 x 235	235	-	65		-	-	03.340.14.26.0
			M 24 x 260	260	-	60		-	-	03.340.14.25.0
		G	M 30 x 190	190	-	45	SW 46	-	-	03.340.15.27.0
			M 30 x 210	210	-			-	-	03.340.15.23.0
			M 30 x 235	235	-			-	-	02.5023.70.88
			M 30 x 2 x 265 [1]	265	-	55		-	-	03.340.15.46.0
			M 30 x 2 x 273 [1]	273	-	50		-	-	03.340.15.48.0
		H	M 30 x 265	265	251	50		-	-	03.340.15.40.0
			M 30 x 290	290	281	45		-	-	03.340.15.33.0
		I	M 30 x 170	170	-	40	Ø 62	-	☐ 30	03.341.05.05.0
			M 30 x 180	180	-			-		03.341.05.02.0
			M 30 x 200	200	-		Ø 52	-		03.341.05.03.0
			M 30 x 200	200	-		Ø 62	-		03.341.05.04.0
		J	M 30 x 2 x 208 [1]	208	-	83	Ø 52	-		03.341.05.08.0
			M 30 x 2 x 208 [1]	208	-		Ø 62	-		03.341.05.09.0
1160	Slider	K	Ø 30 / 50 x 58 x 20	58	50	-	-	Ø 30	20	03.181.20.08.0
1161	Plate (adjusting plate)	L	Ø 24	98	51	66	-	25	6	03.281.44.25.0
			Ø 24						10	03.281.54.21.0
			Ø 24		65				8	03.281.54.20.0
			Ø 30	86		72		31		03.281.54.19.0
			Ø 30	104	57					03.281.54.18.0
			Ø 30		72					03.281.54.14.0
1162	Plate	M	Ø 31 / ☐ 72 x 10	72	72	-	-	Ø 31	10	03.281.63.11.0
1165	Washer	N	Ø 25 / 36 x 6	-	-	-	Ø 36	Ø 25	6	03.320.30.41.0
			Ø 26 / 60 x 6				Ø 60			03.320.33.28.0
			Ø 25 / 60 x 8						8	03.320.33.29.0
			Ø 25 / 62 x 10				Ø 62		10	03.320.32.42.0
			Ø 25 / 70 x 12				Ø 70		12	03.005.31.38.0
			Ø 31 / 45.5 x 6				Ø 45.5	Ø 31	6	03.320.31.27.0
			A 31				Ø 56		4	02.5401.31.01
			Ø 31 / 57 x 6				Ø 57		5	03.320.32.38.0
			Ø 31 / 62 x 5				Ø 62			03.320.34.51.0
			Ø 31 / 71 x 6				Ø 71		6	03.320.34.53.0
			Ø 31 / 71 x 6							03.320.34.54.0 *
1168	Lock nut	O	M 24 / SW 36	-	-	-	SW 36	M 24	24	03.260.14.13.0
			M 30 / SW 46				SW 46	M 30		03.260.15.01.0
			M 30 x 2 / SW 46 [1]				SW 46	M 30	30	03.260.15.02.0
1169	Castle nut	P	M 30 / 935-8				SW 46	M 30	33	02.5204.35.60
1170	Split pin	-	6.3 x 50 / 94				-	-	-	02.6201.62.01

* hardened

[1] Important: Always change the lock nuts in case of replacement to 03.260.15.02.0

Spare parts for ECO Air (EA) air suspensions see Chap. 11.
Spare parts for ECO Air COMPACT (AC) air suspensions see Chap. 12.

3 Spring pivot bolt bearings

3.1 Spare parts for spring pivot bolt bearings

O
SL
AL

Spare parts for spring pivot bolt bearings

A

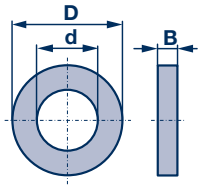

B

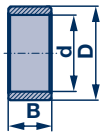

C

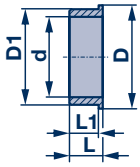

D

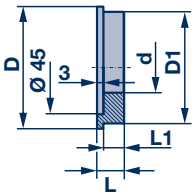

E

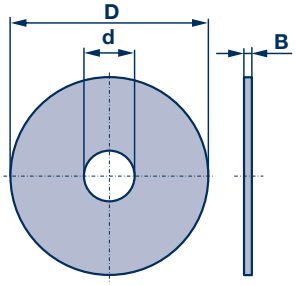

F

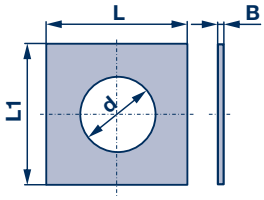

G

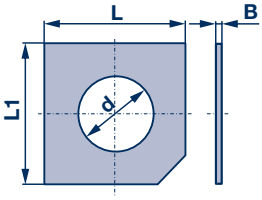

H

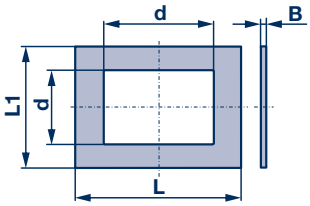

I

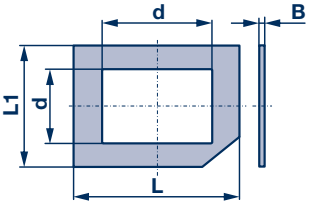

J

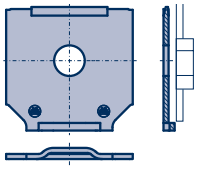

03.164.35.04.0 (M 24)
03.164.35.01.0 (M 30)
for straight hanger brackets, channel cross members and frames

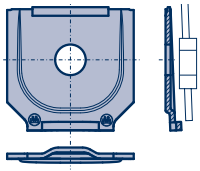

03.164.35.03.0 (M 24)
03.164.35.02.0 (M 30)
for angled hanger brackets

K

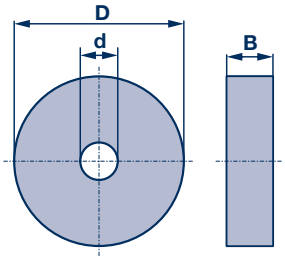

L

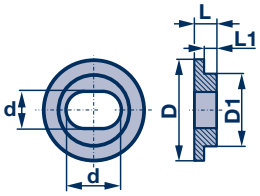

M

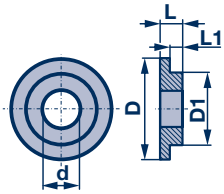

Spring pivot bolt bearings 3

Spare parts for spring pivot bolt bearings 3.1

Spare parts for spring pivot bolt bearings

Item	Designation	Fig.	Dimension	L	L1	D	D1	d	B	BPW code no.:
1173	Washer	A	Ø 31 / 56 x 10	-	-	Ø 56	-	Ø 31	10	03.320.32.41.0
1175	Bush (Polyamid)	B	Ø 41 / 50 x 23			Ø 50		Ø 41	23	03.113.94.10.0
		C	Ø 42 / 50 / 54 x 17.5	17	15	Ø 54	Ø 50	Ø 42	-	03.113.04.11.0
			Ø 54 / 62 / 58 x 9	9	7	Ø 62	Ø 58	Ø 54		03.113.06.16.0
	Ring	B	Ø 42 / 50 x 15.5	-	-	Ø 50	-	Ø 42	10	03.310.92.09.0
1180	Graduated bush	C	Ø 24 / 62 / 42 x 20.5	20.5	15.7	Ø 62	Ø 42	Ø 24	-	03.113.00.58.0
			Ø 24 / 62 / 42 x 22	22	18					03.113.00.28.0
			Ø 24 / 62 / 42 x 24	24	20					03.113.00.51.0
			Ø 24 / 62 / 40 x 24	33.5	27.5		Ø 40			03.113.00.54.0
		D	Ø 24 / 59 / 54 x 13	13	10	Ø 59	Ø 54			03.112.05.03.0
	Ring	B	Ø 24 / 42 x 24	-	-	Ø 42	-		16	03.310.31.63.0
		A	Ø 30 / 39 x 25			Ø 39		Ø 30	25	03.310.30.49.0
	Bush	B	Ø 30 / 42 x 18			Ø 42			16	03.112.13.12.0
	Graduated bush	C	Ø 30 / 45 / 40 x 31	31	25	Ø 45	Ø 40		-	03.113.01.29.0
			Ø 30 / 62 / 42 x 22	22	18	Ø 62	Ø 42			03.113.01.37.0
			Ø 30 / 62 / 40 x 31	31	25		Ø 40			03.113.01.47.0
	Round wearing plate									
1520	Washer	E	Ø 30 / 121 x 5	-	-	Ø 121	-	Ø 30	4.75	03.320.36.08.0
	Square wearing plate									
1520	Plate	F	Ø 56 / ☐ 105 x 4.5	105	105	-	-	Ø 56	4.5	03.281.15.03.0
		G	Ø 56 / ☐ 105 x 4.5							03.281.24.17.0
		F	Ø 56 / ☐ 101/140 x 4.5	101	140					03.281.35.16.0
1525	Plate	H	☐ 62/92 / ☐ 101/140 x 4.5	140	101	-	-	☐ 62/92	4.5	03.281.25.04.0
		I	☐ 62/92 / ☐ 101/130 x 4.5	130						03.281.25.06.0
			☐ 62/92 / ☐ 101/140 x 4.5	140						03.285.25.34.0
1525	Shaped plate	J	Ø 24 / angled hanger bracket	121	125	-	-	Ø 24	5	03.164.35.03.0
			Ø 24 / straight hanger bracket							03.164.35.04.0
			Ø 30 / straight hanger bracket					Ø 30		03.164.35.01.0
			Ø 30 / angled hanger bracket							03.164.35.02.0
1528	Washer	K	Ø 24 / 110 x 15	-	-	Ø 110	-	Ø 24	15	03.320.36.25.0
			Ø 24 / 110 x 30						30	03.320.36.24.0
			Ø 24 / 110 x 33						33	03.320.36.26.0
			Ø 30 / 110 x 30					Ø 30	30	03.005.01.46.0
1530	Washer	L	Ø 24/36 / 50/70 x 15	15.6	9.8	Ø 70	Ø 50	Ø 24/36	-	03.320.14.09.0
	Bush		Ø 30/42 / 55/90 x 20	20	14	Ø 90	Ø 55	Ø 30/42		03.113.01.43.0
	Washer	M	Ø 24 / 50 / 110 x 20	19.5	9.8	Ø 110	Ø 50	Ø 24		03.320.16.09.0
			Ø 30 / 50 / 110 x 18	18.5		Ø 100		Ø 30		03.320.16.03.0
			Ø 30 / 50 / 110 x 20	19.5						03.320.16.04.0
1531	Washer		Ø 24 / 50 / 70 x 15	15.5		Ø 70		Ø 24		03.320.14.08.0
			Ø 30 / 50 / 70 x 16	15.5				Ø 30		03.320.14.07.0
			Ø 30 / 50 / 70 x 18	18.5						03.320.15.10.0

Spare parts for ECO Air (EA) air suspensions see Chap. 11.
Spare parts for ECO Air COMPACT (AC) air suspensions see Chap. 12.

3 Spring pivot bolt bearings

3.1 Spare parts for spring pivot bolt bearings

O
SL
AL

Spare parts for spring pivot bolt bearings

A

Torsion protection with slotted bush, round wearing plate	Torsion protection with slotted bush, square wearing plate, through bush	Torsion protection with square socket, through bush

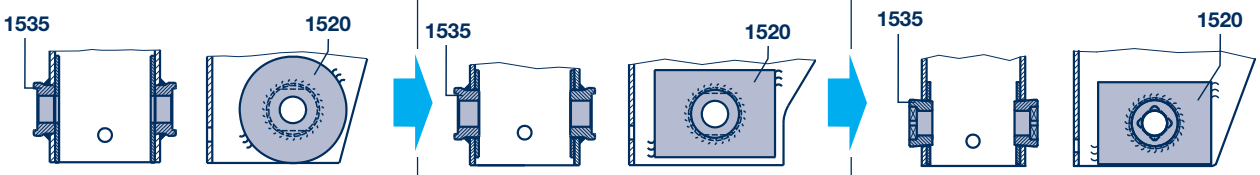

B

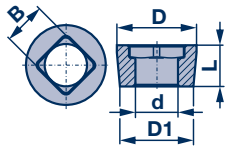

C

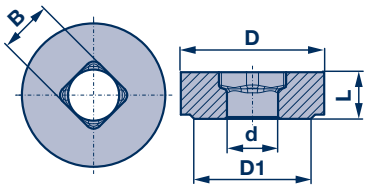

D

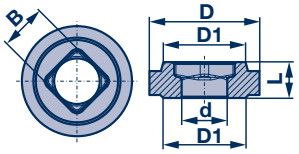

E

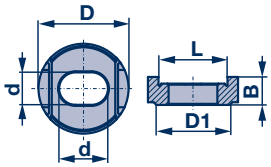

F

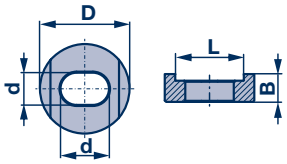

G

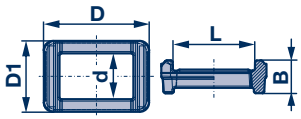

H

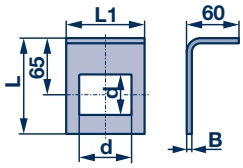

I

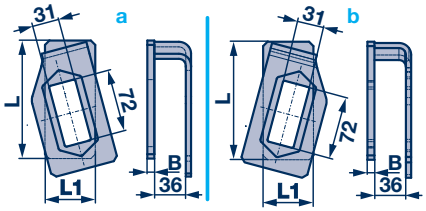

J

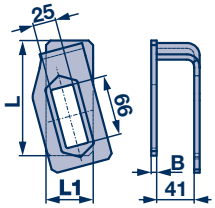

K

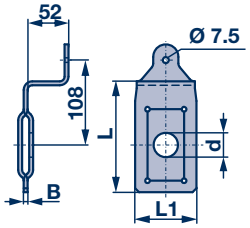

L

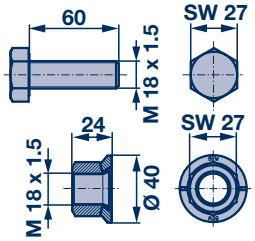

Spring pivot bolt bearings 3

Spare parts for spring pivot bolt bearings 3.1

Spare parts for spring pivot bolt bearings

Item	Designation	Fig.	Dimension	L	L1	D	D1	d	B	BPW code no.:
1535	Bush [1] (weld-in bush)	A		Torsion protection with slotted bush. No longer available. Conversion to bush with square torsion protection.						03.113.02.06.0 03.113.02.09.0
		B	Ø 30 / 51 / 56 x 29	29		56	51	Ø 30.5	☐ 30	03.113.01.34.0
		C	Ø 24 / 55 / 67.6 x 22	22		68	55	Ø 24.1	☐ 24	03.113.00.56.0
		D	Ø 30 / 55 / 73.6 x 24	24		74	55	Ø 30.5	☐ 30	03.113.01.46.0
1540	Bush [1] (weld-in bush)	E	Ø 24 / 36 / 67 x 21	52		62		Ø 24/36	21	03.113.03.10.0
		F	Ø 24 / 36 / 67 x 21			68				03.113.03.09.0 V2A
		E	Ø 30 / 42 / 74 x 23	58		74		Ø 30/42	23	03.113.23.01.0
		F	Ø 30 / 42 / 74 x 23							03.113.01.45.0 V2A
	Shaped part	G	92 x 62 x 29	72		92		70	29	03.001.14.86.0
1560	Shaped plate (welded on torsion protection)	H		110	90			47/60	6	03.161.35.07.0
	Adjusting plate with welded on torsion protection	I a		135	72			31	8	05.001.32.01.0
		I a			58					05.001.32.02.0
		I b								05.001.32.05.0
		J		126	51,5			25	6	05.001.32.04.0
	Formed piece (screwed-on torsion protection)	K		142	78			Ø 31	5	03.001.14.88.0
1631	Hexagon screw	-	M 8 x 20							02.5071.23.00
1570	Hexagon screw	L	M 18 x 1.5 x 60 - 10.9							02.5030.03.11
1571	Hexagon nut		M 18 x 1.5 / SW 27							05.260.53.07.0

[1] Changing the weld-in bushes see Chap. 7.2.1.

Spare parts for ECO Air (EA) air suspensions see Chap. 11.

Spare parts for ECO Air COMPACT (AC) air suspensions see Chap. 12.

Spring bolt assembly (Pos. 1152)

Thread	BPW code no.:	Screw (spring bolt) Item 1154 / 1155	Washer Item 1165	Lock nut Item 1168	Plate Item 1161	Slider Item 1160	Shaped plate Item 1525
M 24	05.857.00.28.0	03.340.14.20.0	03.320.33.28.0	03.260.14.13.0	03.281.44.25.0		03.164.35.03.0
	05.857.00.29.0	03.340.14.20.0	03.320.33.28.0	03.260.14.13.0	03.281.44.25.0		03.164.35.04.0
	05.857.00.30.0	03.340.14.23.0	03.005.31.38.0	03.260.14.13.0	03.281.54.20.0		03.164.35.04.0
	05.857.00.32.0 [1]	03.340.14.24.0	03.320.33.28.0	03.260.14.13.0	03.281.44.25.0		03.164.35.03.0
M 30	05.857.00.03.0	03.340.15.27.0	03.260.31.27.0	03.260.15.01.0			
	05.857.00.15.0	03.341.05.04.0	03.320.34.53.0	03.260.15.01.0	03.281.54.18.0		03.164.35.01.0
	05.857.00.18.0	03.341.05.05.0	03.320.34.53.0	03.260.15.01.0	03.281.54.18.0		03.164.35.02.0
	05.857.00.19.0	03.341.05.05.0	03.320.34.53.0	03.260.15.01.0	03.281.54.18.0		03.164.35.01.0
	05.857.00.20.0	03.341.05.02.0	03.320.34.53.0	03.260.15.01.0	03.271.54.19.0		03.164.35.01.0
	05.857.00.24.0	03.341.05.03.0	03.320.32.38.0	03.260.15.01.0			03.164.35.01.0
M 30 x 2	05.857.00.09.0	03.341.05.09.0	03.320.34.54.0	03.260.15.02.0	03.281.54.14.0	03.181.20.08.0	
	05.857.00.12.0	03.341.05.08.0	03.320.32.38.0	03.260.15.02.0			
	05.857.00.54.0	03.341.05.08.0	03.320.34.54.0	03.260.15.02.0			03.164.35.01.0
	05.857.00.55.0	03.341.05.09.0	03.320.34.54.0	03.260.15.02.0	03.281.54.18.0		03.164.35.01.0
	05.857.00.56.0	03.340.15.48.0		03.260.15.02.0			
	05.857.00.57.0	03.340.15.46.0		03.260.15.02.0			

[1] also included: hexagon nut (pos. 1570) 02.5030.03.11 and hexagon nut (pos. 1571) 05.260.53.07.0 for screwed on brace

3 Spring pivot bolt bearings

3.2 Repair kits for spring pivot bolt bearings

3.2.1 Trailing arms 70 mm wide

AL

Repair kits for spring pivot bolt bearings, trailing arm 70 mm wide

Angled box-section hanger bracket

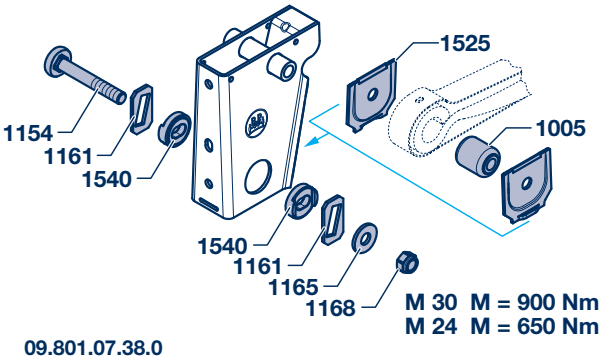

09.801.07.38.0
09.801.07.19.0

Straight box-section hanger bracket Channel cross member

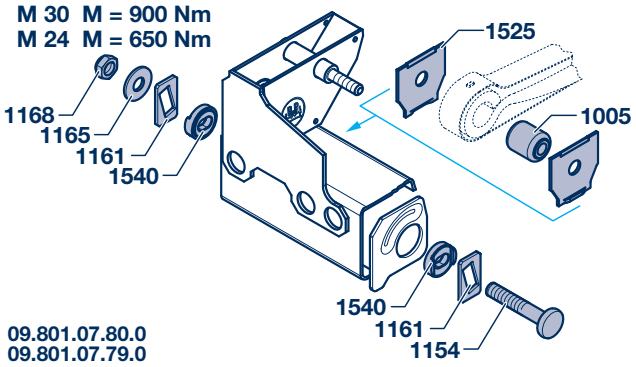

09.801.07.80.0
09.801.07.79.0

Adjustable cast aluminium hanger bracket

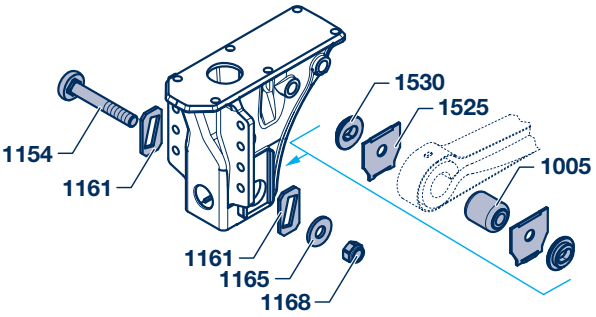

09.801.07.82.0

M 30 M = 900 Nm

Adjustable cast aluminium hanger bracket Axle lift device

M 30 M = 900 Nm

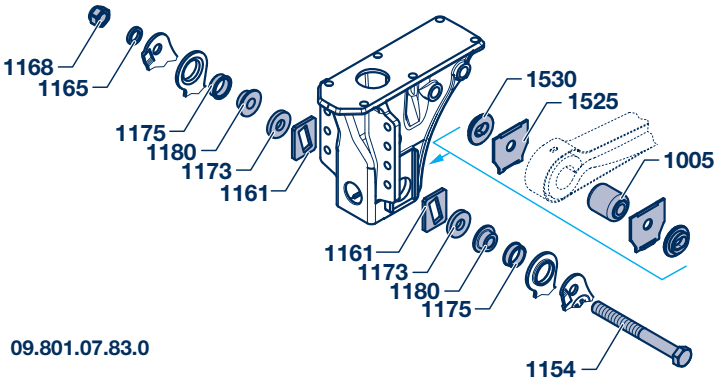

09.801.07.83.0

Spring pivot bolt bearings 3

Repair kits for spring pivot bolt bearings 3.2

Trailing arms 70 mm wide 3.2.1

AL

Repair kits for spring pivot bolt bearings, trailing arm 70 mm wide

Spare parts see Chap. 3.1			Thread	M 24			M 30			
		S = Steel hanger bracket A = Aluminium hanger bracket X = Stainless steel hanger bracket V = adjustable AV = Axle lift device		S X V	S V	A V	S X V	S V	A V	A V AV
				BPW Repair kit			BPW - Item 1150			
Item	Designation	Dimension	BPW code no.:	09.801.07.38.0	09.801.07.79.0	09.801.07.81.0	09.801.07.19.0	09.801.07.80.0	09.801.07.82.0	09.801.07.83.0
1152	Spring bolt ass. Item 1154, 1161, 1165, 1168, 1525		05.857.00.28.0	◎						
			05.857.00.29.0		◎					
			05.857.00.30.0			◎				
			05.857.00.18.0				◎			
			05.857.00.19.0					◎		
			05.857.00.20.0						◎	
1005	Bush	Ø 24 / 60 x 72	02.0314.24.00	◎	◎	◎				
		Ø 30.1 / 60 x 72	02.0315.98.00				◎	◎	◎	◎
1154 1155	Screw (spring bolt)	M 24 x 166 / Ø 56	03.340.14.20.0	◎	◎					
		M 24 x 180 / Ø 56	03.340.14.23.0			◎				
		M 30 x 170 / Ø 62	03.341.05.05.0				◎	◎		
		M 30 x 180 / Ø 62	03.341.05.02.0						◎	
		M 30 x 265 / SW 46	03.340.15.40.0							◎
1161	Plate (adjusting plate)	Ø 24 / 86 x 65 x 8	03.281.54.20.0			◎				
		Ø 24 / 98 x 51.5 x 6	03.281.44.25.0	◎	◎					
		Ø 30 / 104 x 57.5 x 8	03.281.54.18.0				◎	◎		
		Ø 30 / 86 x 65 x 8	03.281.54.19.0						◎	◎
1165	Washer	Ø 25 / 60 x 6	03.320.33.28.0	◎	◎					
		Ø 25 / 70 x 12	03.005.31.38.0			◎				
		Ø 31 / 71 x 6	03.320.34.53.0				◎	◎	◎	
		Ø 31 / 57 x 5	03.320.32.38.0							◎
1168	Lock nut	M 24 / SW 36	03.260.14.13.0	◎	◎	◎				
		M 30 / SW 46	03.260.15.01.0				◎	◎	◎	
1169	Castle nut	M 30 / 935-8	02.5204.35.60							◎
1170	Split pin	6.3 x 50 / 94	02.6201.62.01							◎
1173	Washer	Ø 31 / 56 x 10	03.320.32.41.0							◎
1175	Bush	Ø 42 / 50.5 / 64 x 17	03.113.04.11.0							◎
1180	Graduated bush	Ø 30 / 62 / 42 x 22	03.113.01.37.0							◎
1525	Shaped plate	Ø 24 / angled hanger bracket	03.164.35.03.0	◎						
		Ø 24 / straight hanger bracket	03.164.35.04.0		◎	◎				
		Ø 30 / angled hanger bracket	03.164.35.02.0				◎			
		Ø 30 / straight hanger bracket	03.164.35.01.0					◎	◎	◎
1530	Bush	Ø 30.3 / 42.6 / 55/90 x 20	03.113.01.43.1						◎	◎
1540	Bush	Ø 24.3 / 36.6 / 55/90 x 20	03.113.00.50.1			◎				
		Ø 24.3 / 36.6 / 67.6 x 21	03.113.03.10.0	◎	◎					
		Ø 30.3 / 42.6 / 73.6 x 23	03.113.23.01.0				◎	◎		

Spare parts for ECO Air (EA) air suspensions see Chap. 11.

Spare parts for ECO Air COMPACT (AC) air suspensions see Chap. 12.

3 Spring pivot bolt bearings

3.2 Repair kits for spring pivot bolt bearings

3.2.2 Trailing arms 100 mm wide

O
SL
AL

Repair kits for spring pivot bolt bearings, trailing arm 100 mm wide

Rigid

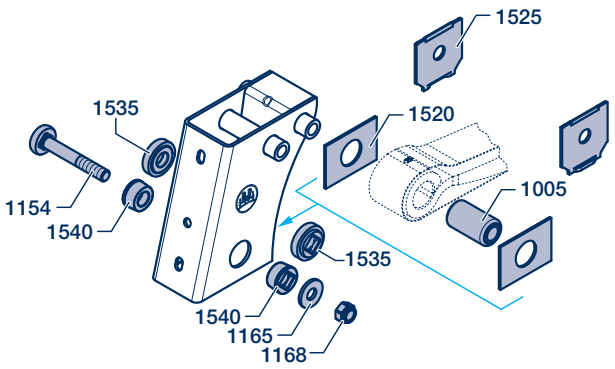

M 30 x 2 M = 900 Nm

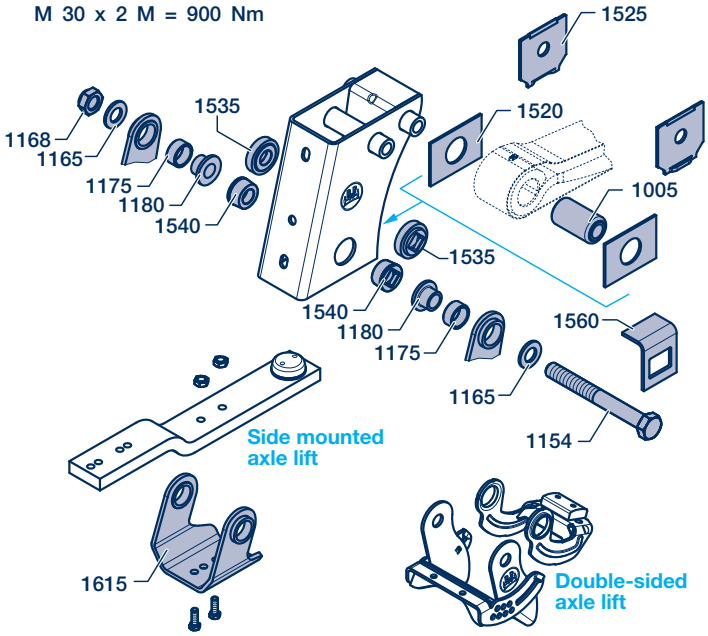

Adjustable

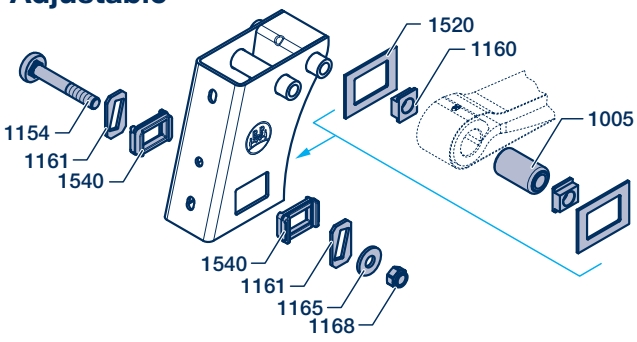

M 30 x 2 M = 900 Nm

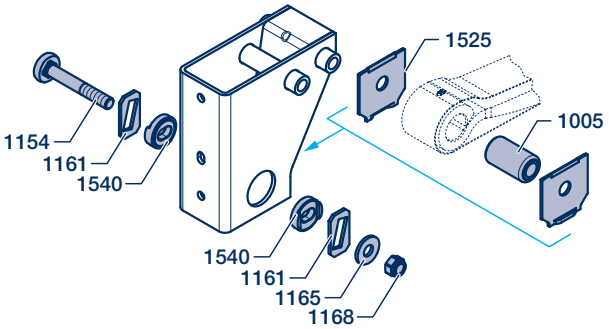

M 30 x 2 M = 900 Nm

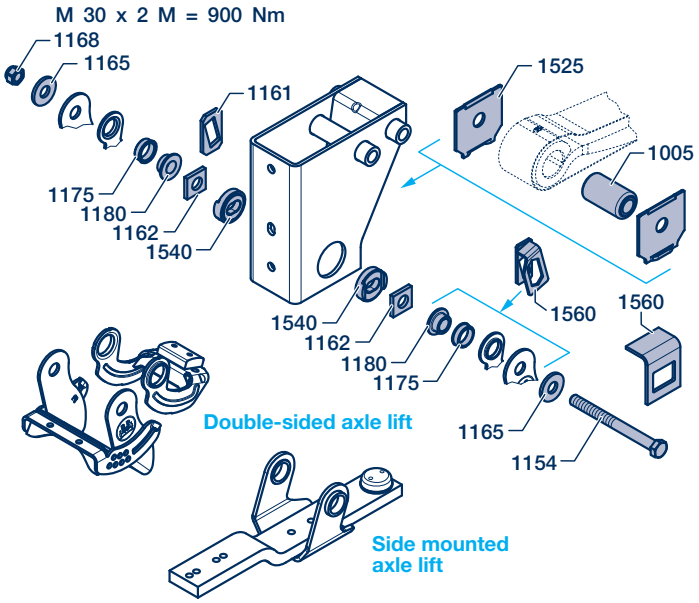

Spring pivot bolt bearings 3

Repair kits for spring pivot bolt bearings 3.2

Trailing arms 100 mm wide 3.2.2

Repair kits for spring pivot bolt bearings, trailing arm 100 mm wide

Spare parts see Chap. 3.1			Thread	M 30						
		S = Steel hanger bracket V = adjustable AV = Axle lift device		S	S	S	S V	S V	S AV	S V AV
				BPW Repair kit			BPW - Item 1150			
Item	Designation	Dimension	BPW code no.:	09.801.08.75.0	09.801.08.76.0	09.801.08.77.0	09.801.08.78.0	09.801.08.79.0	09.801.06.77.0	09.801.07.76.0
1152	Spring bolt ass. Item 1154, 1160, 1161, 1165, 1168, 1525		05.857.00.12.0	◎	◎					
			05.857.00.54.0			◎				
			05.857.00.13.0						◎	
			05.857.00.09.0				◎			
			05.857.00.55.0					◎		
1005	Bush	Ø 30 / 57 x 102 SGS	02.0316.90.00	◎		◎	◎	◎	◎	◎
		Ø 30 / 60 x 102 SG	02.0316.06.00		◎					
1154 1155	Screw (spring bolt)	M 30 x 2 x 208 / Ø 52	03.341.05.08.0 *	◎	◎	◎				
		M 30 x 2 x 208 / Ø 62	03.341.05.09.0 *				◎	◎		
		M 30 x 2 x 265 / SW 46	03.340.15.46.0 *							
		M 30 x 2 x 273 / SW 46	03.340.15.48.0 *						◎	◎
1160	Slider	Ø 30 / 50 x 58 x 20	03.181.20.08.0				◎			
1161	Plate (adjusting plate)	Ø 30 / 104 x 57.5 x 8	03.281.54.18.0					◎		◎
		Ø 30 / 104 x 72 x 8	03.281.54.14.0				◎			
1162	Plate	Ø 31 / ☐ 72 x 10	03.281.63.11.0							
1165	Washer	Ø 31 / 71 x 6	03.320.34.54.0	◎	◎	◎	◎	◎		
		Ø 31 / 57 x 6	03.320.32.38.0							◎
		A 31	02.5401.31.01						◎	
		Ø 31 / 62 x 5	03.320.34.51.0							
1168	Lock nut	M 30 / SW 46	03.260.15.01.0							
		M 30 x 2 / SW 46	03.260.15.02.0	◎	◎	◎	◎	◎	◎	◎
1175	Bush	Ø 41 / 50 x 23	03.113.94.10.0						◎	◎
1180	Ring	Ø 30 / 39 x 25	03.310.30.49.0							
	Graduated bush	Ø 30 / 62 / 40 x 31	03.113.01.47.0						◎	◎
1520	Plate	Ø 56 / ☐ 101/140 x 4.5	03.281.35.16.0	◎	◎				◎	
		Ø 56 / ☐ 105 x 4.5	03.281.15.03.0	◎	◎				◎	
		☐ 62/92 / ☐ 101/130 x 4.5	03.281.25.06.0				◎			
		☐ 62/92 / ☐ 101/140 x 4.5	03.281.25.04.0				◎			
1525	Shaped plate	Ø 30 / straight hanger bracket	03.164.35.01.0			◎		◎		◎
1535	Bush	Ø 30 / 51 / 56 x 29	03.113.01.34.0	◎	◎				◎	
		Ø 30 / 55 / 73.6 x 24	03.113.01.46.0			◎				
1540	Shaped part	92 x 62 x 29	03.001.14.86.0				◎			
	Bush	Ø 30.3 / 42.6 / 73.6 x 23	03.113.23.01.0					◎		◎
1560	Torsion protection		03.161.35.07.0						◎	
	Adjusting plate with torsion protection		05.001.32.02.0							◎
1615	Support		05.189.13.19.0						◎	

* **Important: Always change the lock nuts in case of replacement!**
Spring bolt and lock nuts are successively being converted to fine thread.
Spring bolt 03.341.05.08.0 Replacement for 03.341.05.03.0 (M 30 x 200 / Ø 52)
Spring bolt 03.341.05.09.0 Replacement for 03.341.05.04.0 (M 30 x 200 / Ø 62)
Spring bolt 03.340.15.46.0 or 03.340.15.48.0 Replacement for 03.340.15.37.0 (M 30 x 265 / SW 46)

Spare parts for ECO Air (EA) air suspensions see Chap. 11.
Spare parts for ECO Air COMPACT (AC) air suspensions see Chap. 12.

4 BPW Air bags

General

Standard air bag

BPW air bags are firmly rolled into the top air bag cover and are bonded onto the clamping plate at the bottom by vulcanisation.

The top air bag cover is either bolted onto the frame trussing or a plate or packer is welded onto the vehicle frame to attach the bag, depending on the bag version. The top air bag cover plate is secured by two M 12 lock nuts.

The rolling piston is made from glass-fibre reinforced plastic (GRP) with a steel support to reduce the weight and ensure corrosion resistance. The integrated bumper protects against damage when the bags are vented.

The lower air bag plate is bolted onto the trailing arm using two M 16 locking screws.

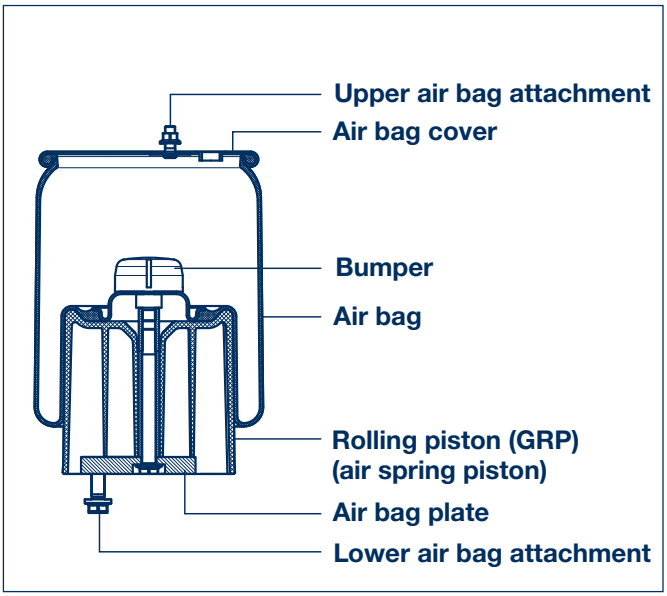

BPW Air bags 4

General

Reduced weight of the Airlight II air suspension with the new air bag 30 / 30 K

As part of a further development of the Airlight II air suspension, BPW introduced new optimised trailing arms from 01 July 2010, as well as a centrally bolted air bag BPW 30 / 30 K for offset V = 20 mm.

Currently, the air bag is fastened to the trailing arm by means of a universal steel plate inserted into the base of the air bag piston with possible offsets 0 / 20 / 60. This steel plate is attached to the trailing arm with two screws.

In future, the air bag will be bolted directly to the trailing arm with just a single screw and using the most common standard offset of V = 20 mm. A four-hole pattern will be drilled into the new trailing arm. In addition to the new centrally bolted air bag, the familiar air bags BPW 30 / 30 K and BPW 36 / 36 K / 36-1 can continue to be attached using a steel plate and different offsets.

The new centrally bolted air bag saves a total of 15 kg on a 3-axle unit (5 kg per module) compared to the previous version.

Note: Please note that the new air bag can only be combined with the new trailing arm.

The bolt/hole diameters prevent the new air bag from being attached to an old trailing arm by mistake.

However, the old bag with the steel plate can continue to be used for all versions with old or new springs.

From a technical point of view, there are no restrictions for using both versions on the same axle or vehicle.

Your sales contact will be happy to assist you when planning the conversion.

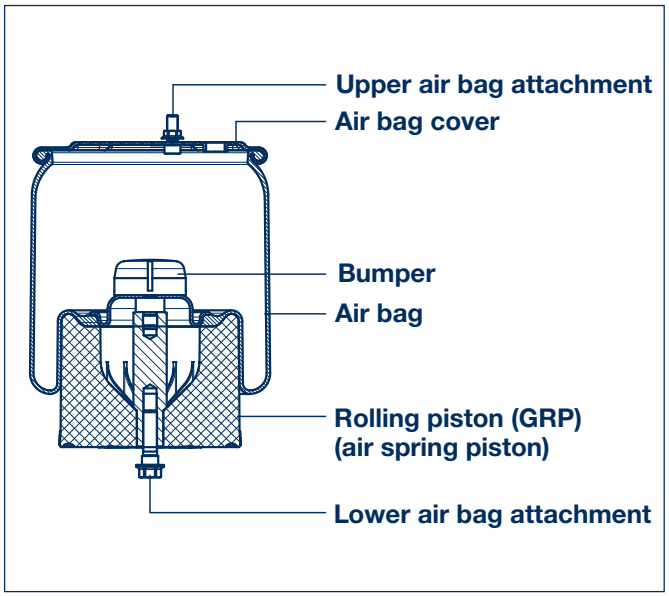

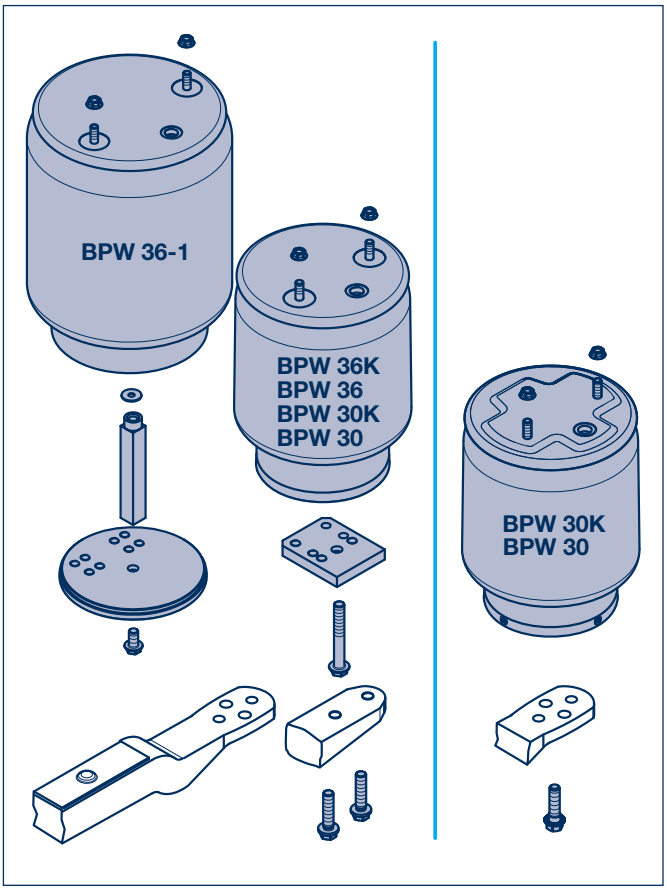

4 BPW Air bags

General

Split air bag (Combi Air bag)

A Combi Air bag is divided into two parts: The air bag is bolted onto the vehicle frame with the rolling piston while the centering cone is connected to the trailing arm or integrated to the axle plates. If the vehicle is lifted, the axle and the cone move downwards.

The movement is restricted by the shock absorbers.

However, the air bag remains in its rest position.

If the vehicle is lowered to the ground, the air bag and centering cone come together once more.

The bag can neither fold nor crease.

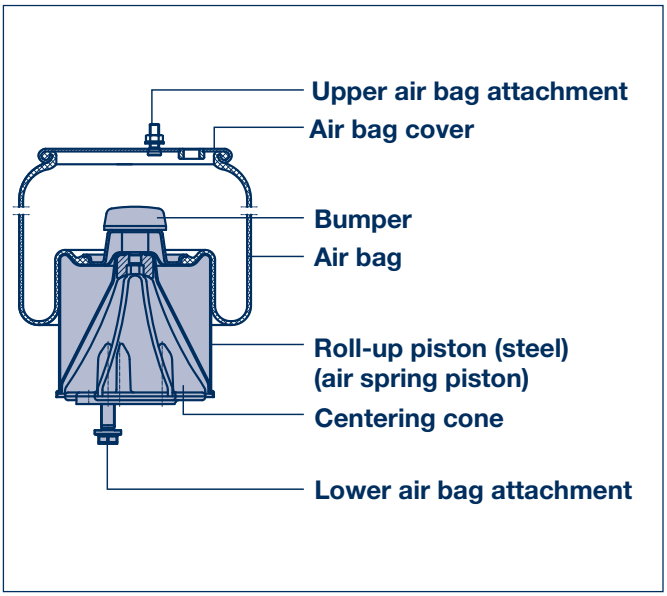

Stroke limitation

The upward travel is restricted by a bumper inside the air bag. The downward travel must be restricted under certain operating conditions.

Air supply

The pressure needed during driving is applied via a compressed air line that is connected to the air bag via the threaded sleeve (M 22 x 1.5) welded into the air bag cover or via a stud bolt (M 18 x 1.5 / M 20 x 1.5).

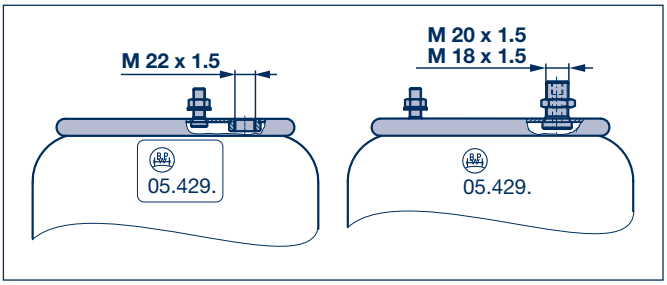

BPW Air bags 4

General

Determining replacement air bags

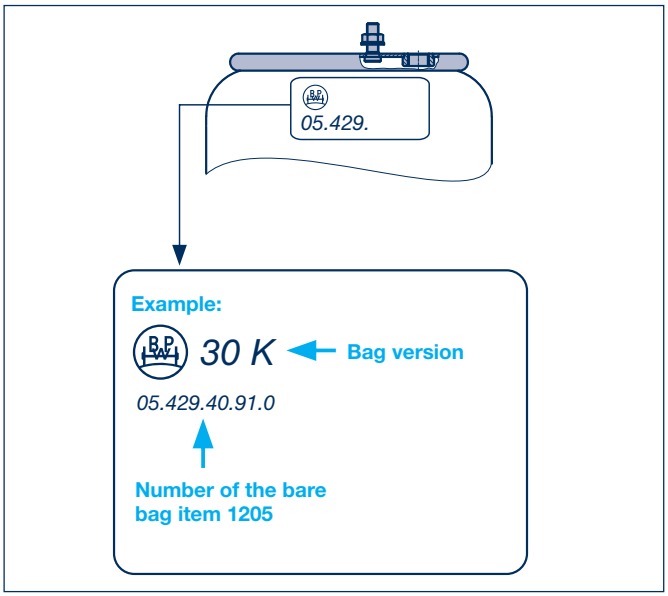

1. Clarifying the version

◎ Standard air bag or split air bag (Combi Air bag)

Ø 300	**BPW 30**	for stroke 200 mm
	BPW 30 K	for stroke 180 mm
Ø 360	**BPW 36**	for stroke 200 mm
	BPW 36 K	for stroke 180 mm
	BPW 36-1	for stroke up to 340 mm
	BPW 36-2	for stroke up to 450 mm
	BPW 36-5	for stroke up to 380 mm

The air bag design type and BPW code no. of the bare air bag can be read from each air bag.

2. Determining the type of air connection

◎ Air connection on welded threaded sleeve in the air bag or hollow stud bolt.

3. Air bag attachment

◎ Top air bag attachment in middle of bag or offset to the side?

◎ Measure the position of the top air bag attachment on the frame in relation to the bottom air bag attachment on the trailing arm (the maximum lateral offset between the top and bottom air bag attachment is not allowed to exceed 10 mm).

The top and bottom air bag attachments must not be installed with any rotational misalignment!

◎ Bottom attachment with 2 locking screws or one central screw?

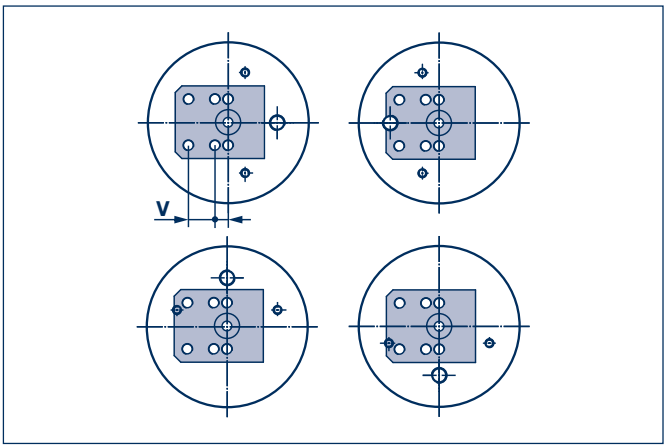

4. Old version of air bags

Complete air bags of the older version, air bags with aluminium pistons and internal aluminium support as well as split bags with glass fibre reinforced plastic taper (BPW 36) are no longer available.

If replacement is required, convert to BPW air bags with GRP piston.

The most common spare parts for older air bags with steel piston are still available.

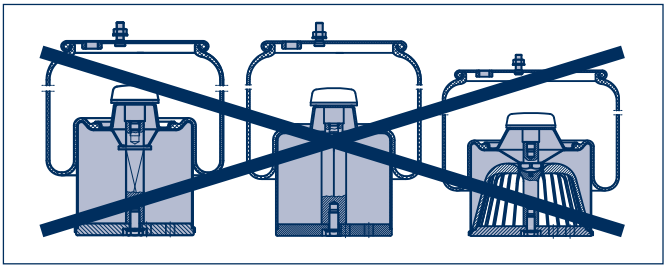

4 BPW Air bags

4.1 Air bags complete

4.1.1 Air bags Ø 300

O
SL
AL
EA
AC

Air bags Ø 300

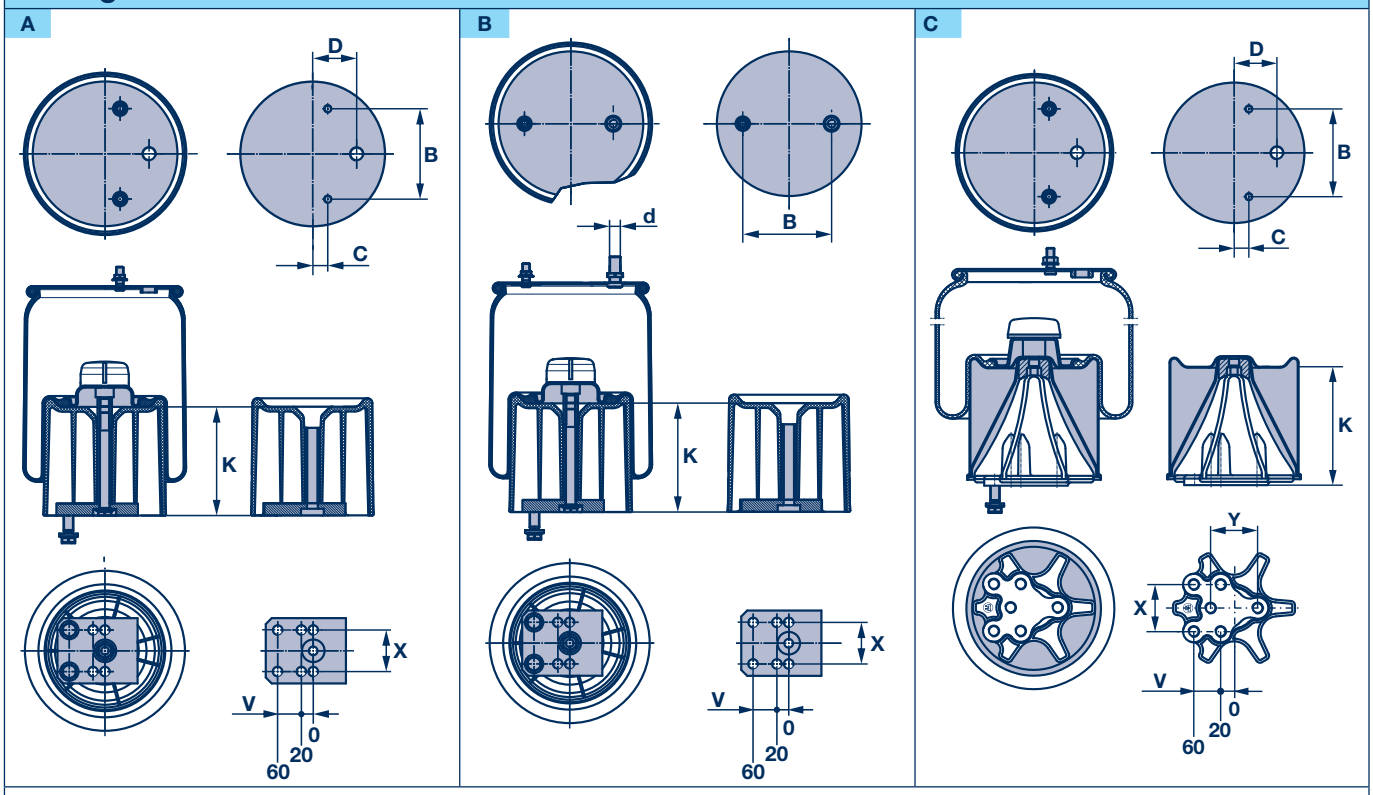

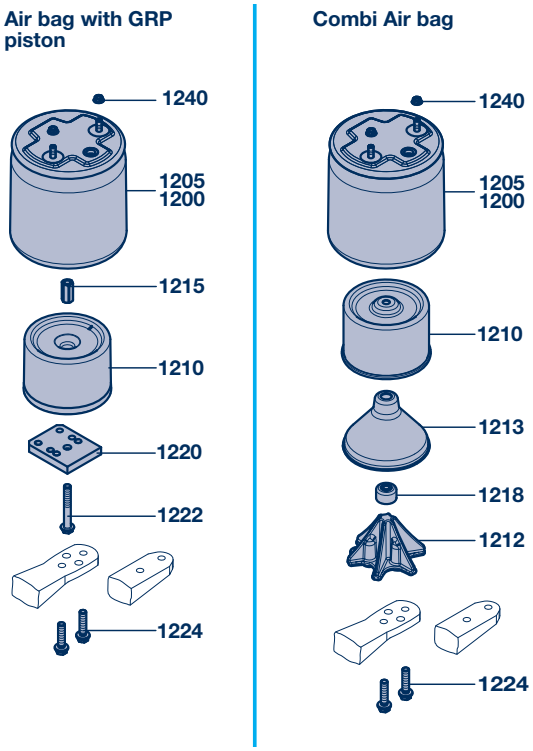

Observe position of lower attachment plate – upper air bag attachment!

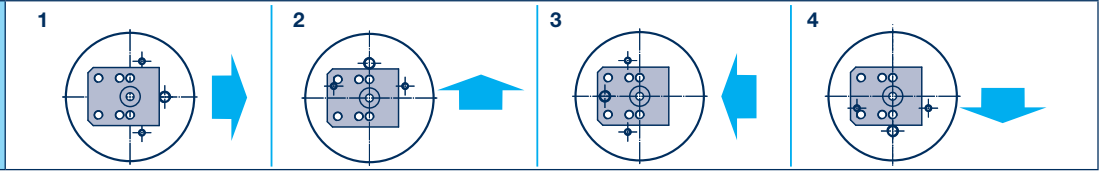

BPW Air bags 4

Air bags complete 4.1

Air bags Ø 300 4.1.1

Air bags Ø 300

Fig.	Dimension V	X	K	Y	B	C	D	d	BPW code no.: BPW Air bag cpl. Item 1200	BPW Code no. bare Item 1205	Piston Item 1210 Item 1210 / 1213	Lower plate Item 1220 Hanger bracket (Combi Air bag) Item 1212
BPW 30												
	Air bag standard											
A 1	0 / 20 / 60	70	180	-	150	0	73	-	05.429.43.29.0	05.429.42.03.0	05.139.39.50.0	03.280.95.02.0
A 3									05.429.43.30.0			
A 1						25			**05.429.43.20.0**	05.429.40.03.0		
A 3									05.429.43.56.0			
	Air bag with integrated air connection in stud bolt											
B 2	0 / 20 / 60	70	180	-	170	0	0	M 18 x 1.5	05.429.43.25.0	05.429.41.25.0	05.139.39.50.0	03.280.95.02.0
B 2					157			M 20 x 1.5	05.429.43.62.0	05.429.42.54.0	05.139.39.58.0	
	Split bag (Combi Air bag)											
C 1	0 / 20 / 60	70	180	70	150	25	73	-	05.429.41.91.1	05.429.40.03.0	03.139.00.22.0 03.139.00.23.0	03.375.09.37.0
BPW 30 K												
	Air bag standard											
A 1	0 / 20 / 60	70	135	-	150	0	73	-	05.429.43.27.0	05.429.42.04.0	05.139.39.51.0	03.280.95.02.0
A 3									05.429.43.28.0			
A 1						25			**05.429.43.21.0**	05.429.40.91.0		
A 3									05.429.43.37.0			
A 1			180						05.429.43.22.0		05.139.39.50.0	
A 3									05.429.43.31.0			
	Air bag with integrated air connection in stud bolt											
B 1	0 / 20 / 60	70	135	-	157	0	0	M 20 x 1.5	05.429.43.23.0	05.429.41.77.0	05.139.39.51.0	03.280.95.02.0
B 1					170			M 18 x 1.5	05.429.43.24.0	05.429.41.56.0		
B 3									05.429.43.32.0			
B 1			180		157			M 20 x 1.5	05.429.43.26.0	05.429.41.77.0	05.139.39.50.0	
	Split bag (Combi Air bag)											
C 1	0 / 20 / 60	70	136	70	150	0	73	-	05.429.42.13.1	05.429.42.04.0	03.139.00.25.0 03.139.00.24.0	03.375.09.38.0
C 1						25			**05.429.42.05.1**	05.429.40.91.0		
C 1			180						05.429.42.11.1		03.139.00.22.0 03.139.00.23.0	03.375.09.37.0

Air bags with steel or aluminium pistons are no longer available.
Conversion from air bags with steel or aluminium pistons to air bag with GRP piston

BPW 30 Conversion kit **05.801.09.73.0** for 1 air bag

BPW 30 K Conversion kit **05.801.09.74.0** for 1 air bag

consisting of lower attachment plate, GRP piston and attachment parts.

For conversion see chapter 4.2.
Alternative versions on request.

4 BPW Air bags

4.1 Air bags complete

4.1.1 Air bags Ø 300

O
SL
AL
EA
AC

Air bag Ø 300 - Central bolt

D

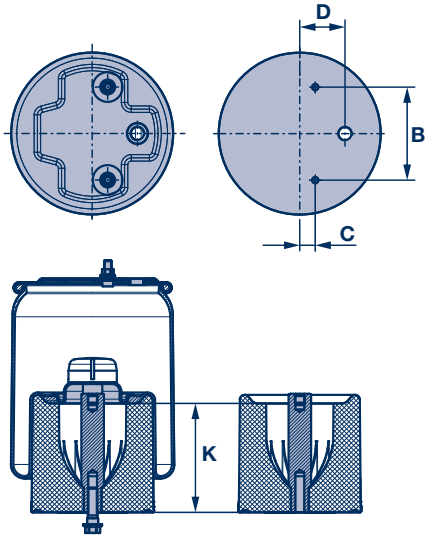

E

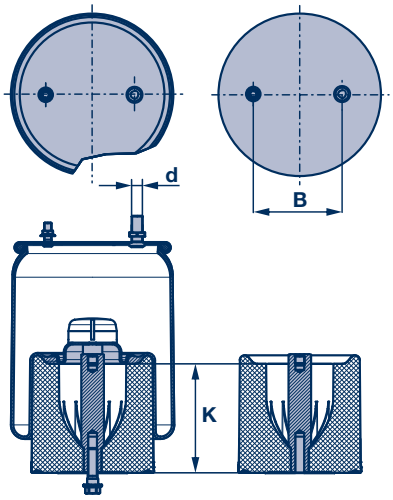

F

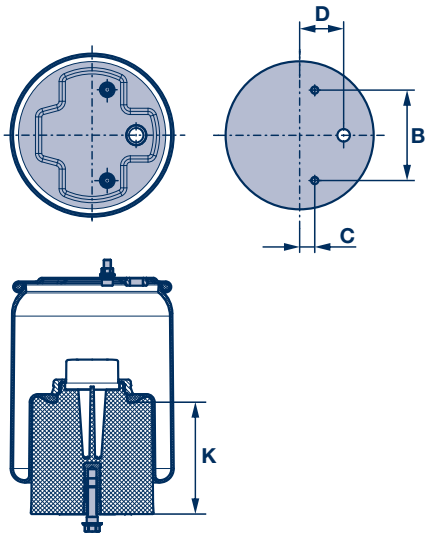

G

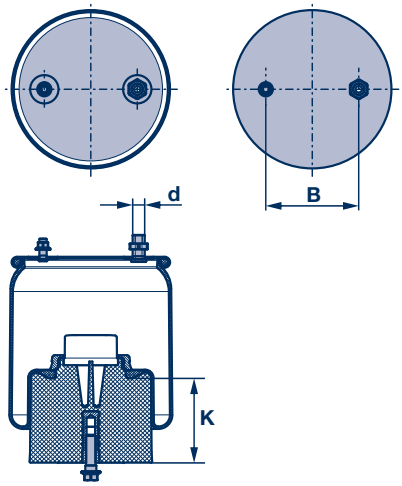

Air bags with GRP piston central bolt

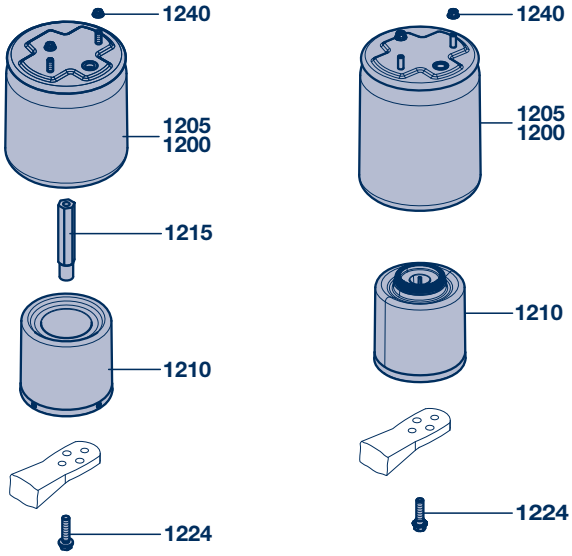

BPW Air bags 4

Air bags complete 4.1

Air bags Ø 300 4.1.1

Air bag Ø 300 - Central bolt											
	Dimension								BPW code no.:		
Fig.	V	X	K	Y	B	C	D	d	BPW Air bag cpl. Item 1200	BPW Code no. bare Item 1205	Piston Item 1210 Item 1210 / 1213
BPW 30											
	Air bag standard										
D	0		180	-	150	25	73	-	05.429.43.85.0 *	05.429.40.03.0	03.139.39.56.0
F	0	-	184	-	150	25	73	-	05.429.43.90.0	05.429.42.76.0	05.139.39.60.0
	Air bag with integrated air connection in stud bolt										
E	0	-	180	-	157	0	0	M 20 x 1.5	05.429.43.88.0	05.429.42.54.0	03.138.39.56.0
BPW 30 K											
	Air bag standard										
D	0	-	135	-	150	25	73	-	05.429.43.86.0 *	05.429.40.91.0	03.139.39.57.0
F	0	-	139	-	150	25	73	-	05.429.43.91.0	05.429.42.77.0	05.139.39.61.0
	Air bag with integrated air connection in stud bolt										
E	0	-	135	-	157	0	0	M 20 x 1.5	05.429.43.89.0 *	05.429.41.77.0	03.138.39.57.0
G	0	-	139	-	157	0	0	M 20 x 1.5	05.429.43.96.0	05.429.42.80.0	05.139.39.61.0

* The air bellows 05.429.43.85.0 / 86.0 / 89.0 are successively replaced by 05.429.43.90.0 / 91.0 / 96.0.
With the new versions, it will no longer be possible to replace individual components in the future. In the event of a repair, the air bellows must be replaced completely.

Air bags with steel or aluminium pistons are no longer available.
Conversion from air bags with steel or aluminium pistons to air bag with GRP piston

BPW 30 Conversion kit **05.801.09.73.0** for 1 air bag
BPW 30 K Conversion kit **05.801.09.74.0** for 1 air bag
consisting of lower attachment plate, GRP piston and attachment parts

For conversion see chapter 4.2.

Alternative versions on request.

4 BPW Air bags

4.1 Air bags complete

4.1.2 Air bags Ø 360

O
SL
AL
EA
AC

Air bags Ø 360

A BPW 36 / BPW 36-1

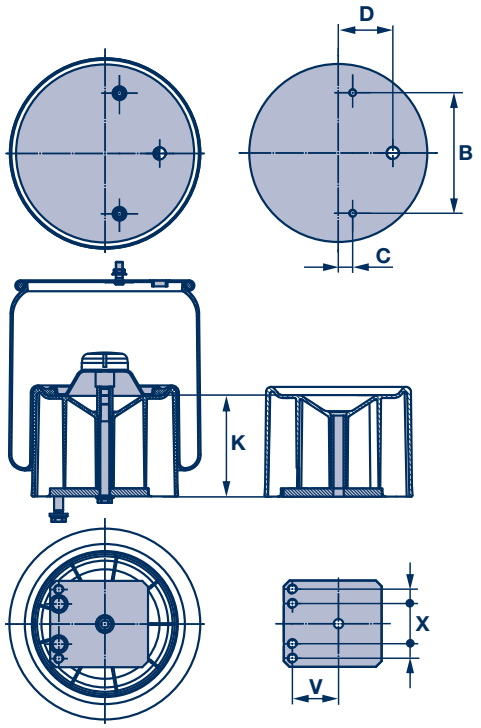

B BPW 36 K

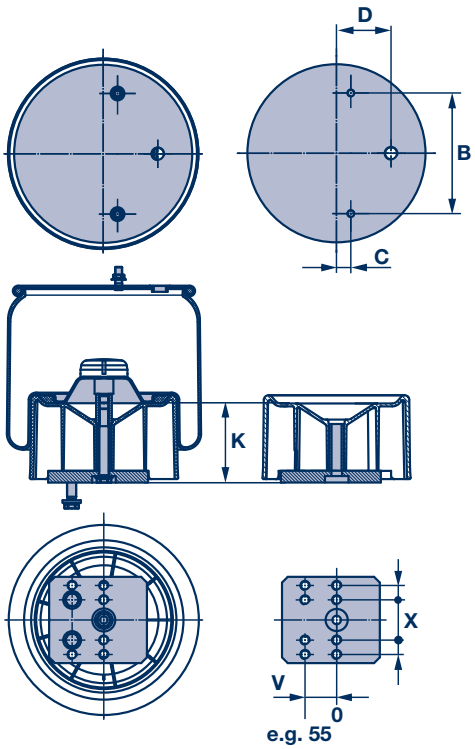

Observe position of lower attachment plate – upper air bag attachment!

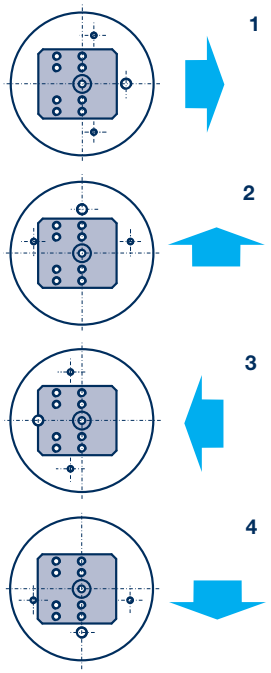

C BPW 36-1 (steel piston)

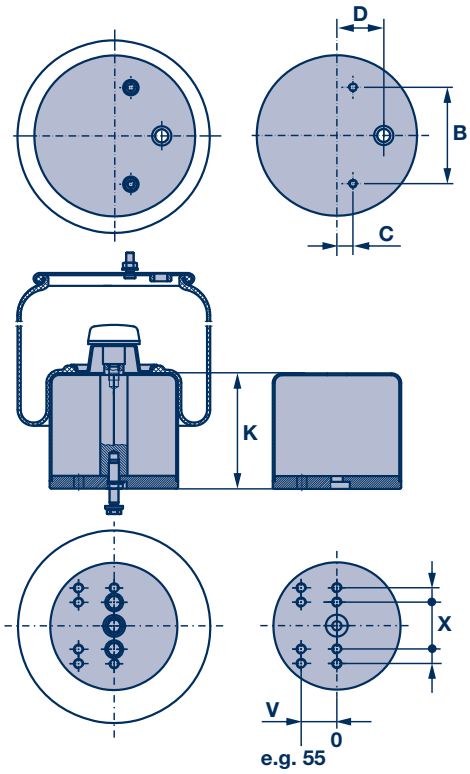

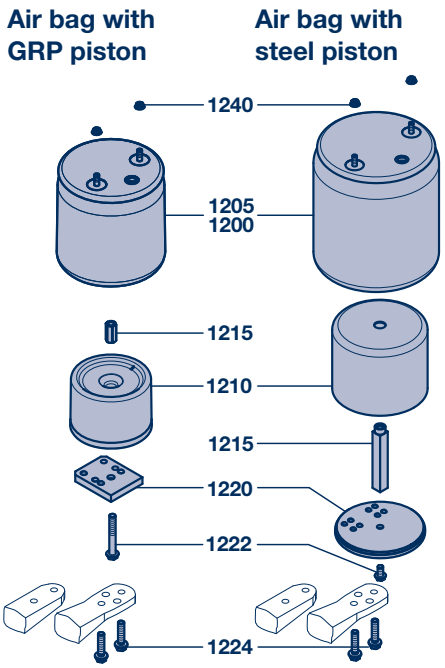

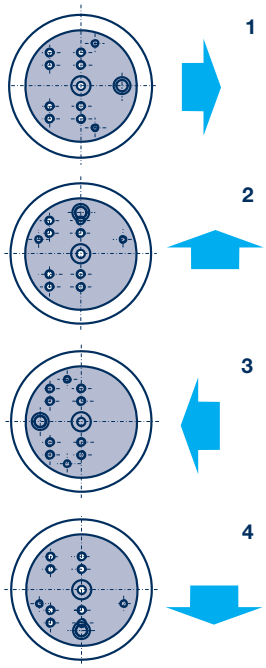

BPW Air bags 4

Air bags complete 4.1

Air bags Ø 360 4.1.2

Air bags Ø 360

Fig.	Dimension V	X	K	B	C	D	Remark	BPW code no.: BPW Air bag cpl. Item 1200	BPW Code no. bare Item 1205	Piston Item 1210 Item 1210 / 1213	Lower plate Item 1220
BPW 36											
	Air bag standard										
A 1	0 / 55	70 / 120	180	210	25	95	GRP piston	05.429.43.48.0	05.429.40.01.0	05.139.39.52.0	03.280.95.04.0
A 1	45 / 80							**05.429.43.51.0**			03.280.95.03.0
A 3	80		174					05.429.43.50.0 [1]			03.280.75.04.0
A 1								05.429.43.38.0			
C 1	0 / 55		215					05.429.41.84.0		03.139.00.04.0	03.320.09.46.0
C 1	45 / 80							05.429.41.54.0			03.320.09.35.0
C 1	32 / 90		180					05.429.40.61.1		03.139.39.43.0	03.320.09.23.0
BPW 36 K											
	Air bag standard										
B 1	0 / 55	70 / 120	135	210	25	95	GRP piston	05.429.43.46.0	05.429.41.01.0	05.139.39.53.0	03.280.95.04.0
B 3								05.429.43.49.0			
B 3			180					05.429.43.47.0		05.139.39.52.0	
B 1	45 / 80		135					**05.429.43.41.0**		05.139.39.53.0	03.280.95.03.0
B 3								05.429.43.44.0			
B 3			180					05.429.43.58.0		05.139.39.52.0	
B 1	80		129					05.429.43.39.0		05.139.39.53.0	03.280.75.04.0
C 1	32 / 90		135				Steel piston	05.429.41.04.1		03.139.39.48.0	03.320.09.23.0
BPW 36-1											
	Air bag standard										
A 1	45 / 80	70 / 120	180	210	25	95	GRP piston	05.429.43.45.0	05.429.40.05.0	05.139.39.52.0	03.280.95.03.0
C 1	0 / 55		215				Steel piston	05.429.42.01.0		03.139.00.04.0	03.320.09.46.0
C 3								05.429.41.83.0			
C 1	45 / 80							05.429.41.69.0			03.320.09.35.0
C 1	80		210					05.429.41.38.0			03.320.09.33.0
C 1	32 / 90		215					05.429.41.59.0			03.320.09.23.0
BPW 36 Direct air suspension (Airlight[Direct])											
-	-	-	210	190	25	50	-	05.429.42.52.0	05.429.42.51.0	03.139.38.01.0 03.139.00.27.0	-

[1] Air bag only available in individual parts

Type **BPW 36** and **BPW 36 K** air bags with steel or aluminium pistons are no longer available in some cases.
Conversion from air bags with steel or aluminium pistons to air bag with GRP piston

BPW 36	Conversion kit	**05.801.21.33.0**	V = 0 / 55	for 1 air bag	consisting of lower attachment plate, GRP piston and attachment parts
	Conversion kit	05.801.21.32.0	V = 45 / 80		
	Conversion kit	05.801.21.31.0	V = 80		
BPW 36 K	Conversion kit	**05.801.21.30.0**	V = 0 / 55	for 1 air bag	
	Conversion kit	05.801.21.29.0	V = 45 / 80		
	Conversion kit	05.801.21.28.0	V = 80		

For conversion see chapter 4.2.
Alternative versions on request.

4 BPW Air bags

4.2 Conversion to air bags with GRP pistons

Conversion from air bags with steel or aluminium pistons

Air bag with steel or aluminium piston

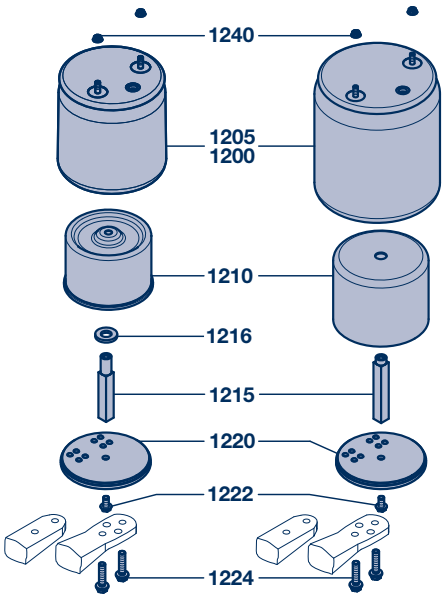

Air bag with GRP piston

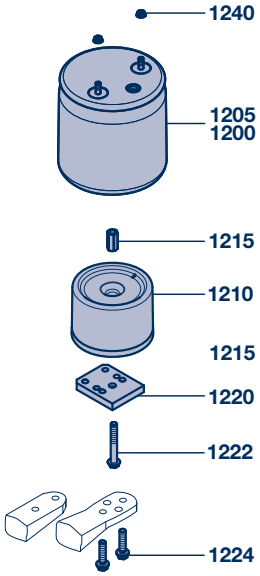

Types BPW 30 / 30 K / 36 and 36 K air bags with steel or aluminium pistons are no longer available in some cases.

If replacement is required, change over to the air bag with GRP piston.

Observe position of lower attachment plate – upper air bag attachment!

Disassembly:

- Inflate air bags as much as possible using the rotary slide valve/change-over valve.
- Support the vehicle to prevent accidents, e.g. place a suitable distance piece between the vehicle frame and trailing arm.
- Vent the air bag.
- Remove the compressed air connection.
- Unscrew upper (1240) and lower (1224) air bag attachments and remove the air bag.
- Apply compressed air into the hole for the air connection until the bag is completely unrolled.
- Unscrew and remove locking screw (1222) and take off bottom washer (1220).
- Unscrew and remove the square bolt (1215) with an impact wrench and detach piston (1210) from the air bag.

Assembly:

- Screw threaded sleeve (1215) onto the air bag to tightening torque of 130 Nm.
- Place lower base plate (1220) into the GRP piston (1210) and screw on loosely using locking screw (1222).
- Align the top and bottom bag attachment points relative to one another and tighten locking screw (1222) to a tightening torque of 230 Nm.
  (the air bag must not be twisted after installation in the vehicle!)
- Install the air bag in the vehicle, tighten the top and bottom attachments to the corresponding tightening torque. Make the air connections. Check for leaks.
- Inflate the air bag, remove the support.

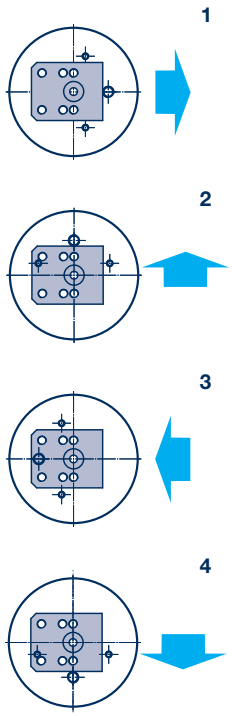

BPW Air bags 4

Conversion from air bags with steel or aluminium pistons 4.2

Conversion from air bags with steel or aluminium pistons

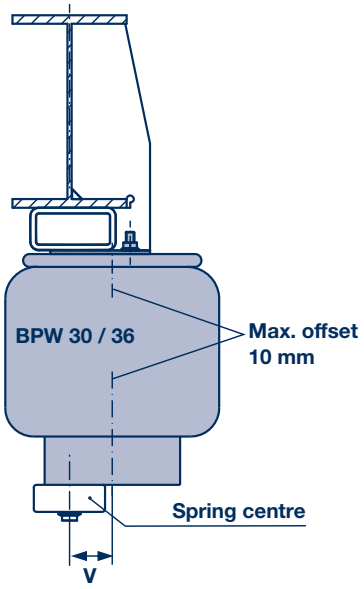

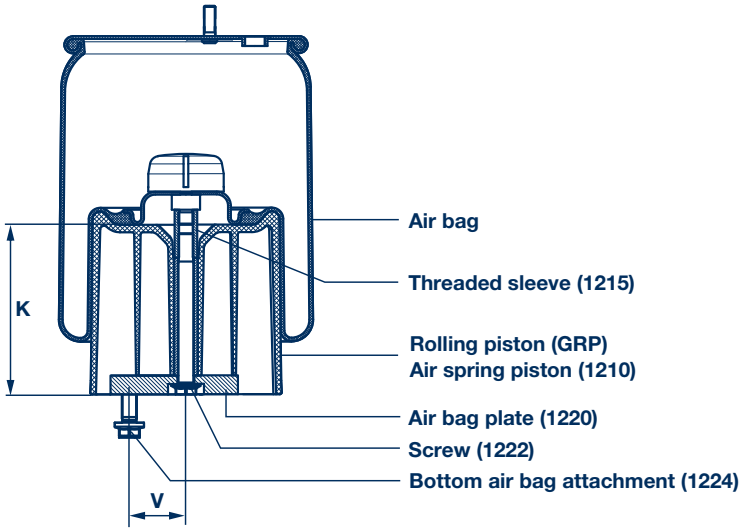

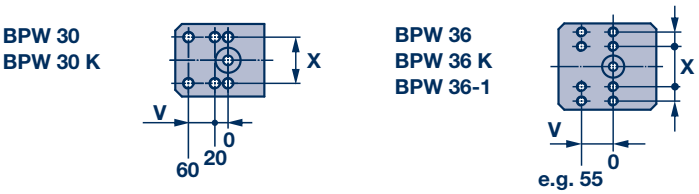

The maximum lateral offset between the upper and lower air bag attachments must not exceed 10 mm.

Item	Designation	BPW code no.:	Dimension V	Dimension X	Dimension K	Applications
1248	Conversion kit cpl.	**BPW 30**				
		05.801.09.73.0	0 / 20 / 60	70	180	**BPW 30**
		05.801.09.74.0			135	**BPW 30 K**
		BPW 36				
		05.801.21.33.0	0 / 55	70 / 120	180	**BPW 36**
		05.801.21.32.0	45 / 80			**BPW 36**
		05.801.21.31.0	80			**BPW 36**
		05.801.21.30.0	0 / 55		135	**BPW 36 K**
		05.801.21.29.0	45 / 80			**BPW 36 K**
		05.801.21.28.0	80			**BPW 36 K**

Conversion kit complete comprising:

Rolling piston (air spring piston) (item 1210)
Lower air bag plate (item 1220)
Threaded sleeve (item 1215)
Inner support screw (item 1222)
Lower fixing screws (item 1224)

4 BPW Air bags

4.3 Spare parts

Air bags / Spare parts

Standard air bag

Air bag with steel piston

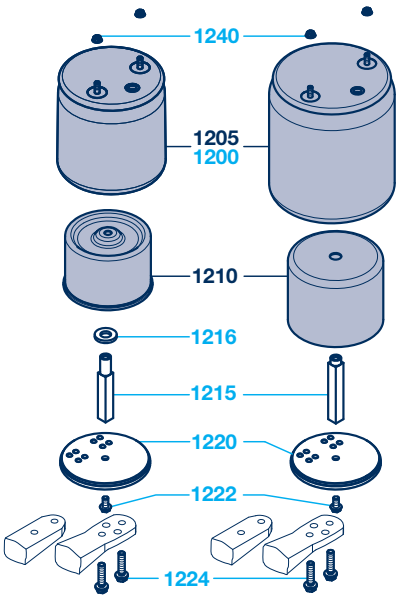

Air bag with GRP piston

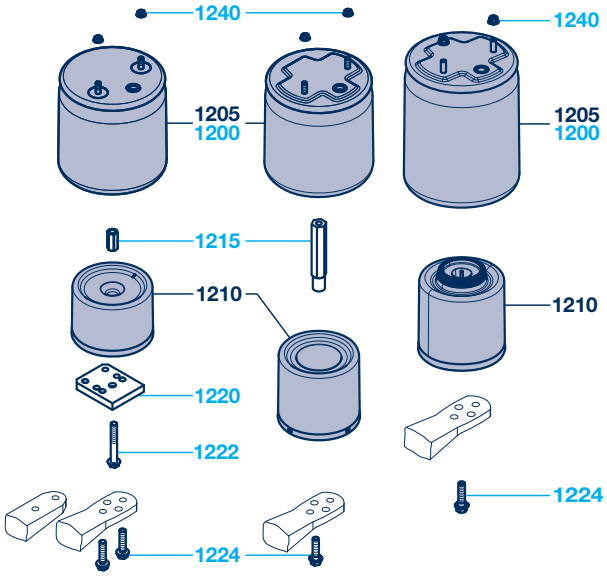

Split bag (Combi Air bag)

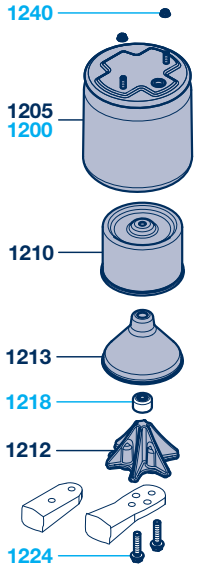

A

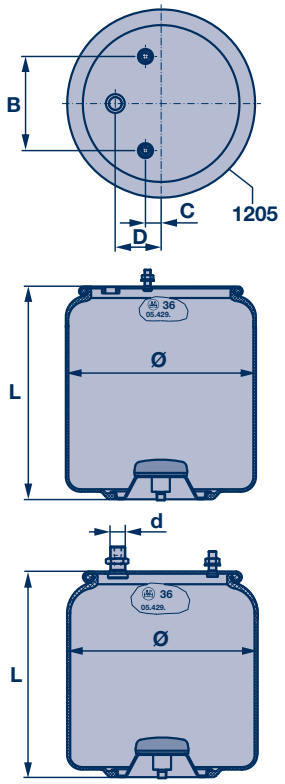

B

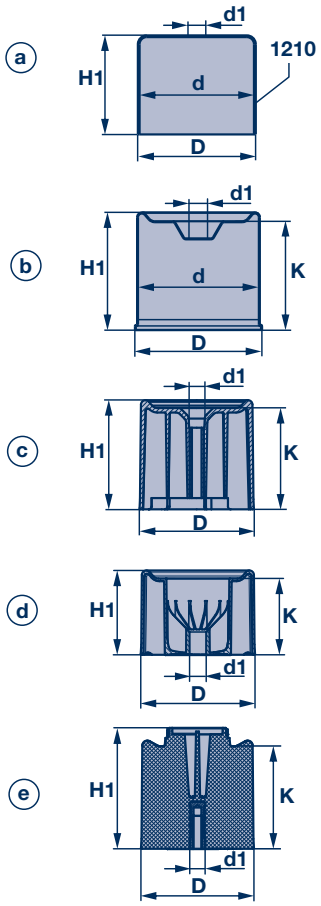

C

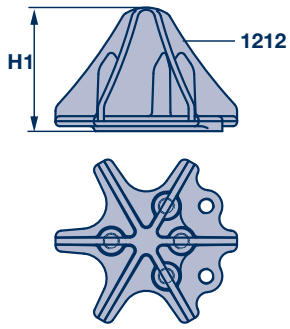

D

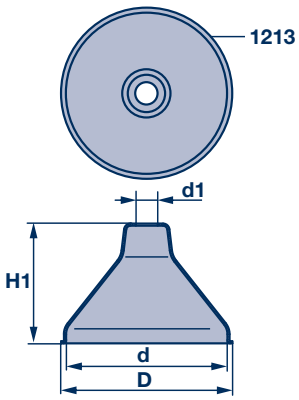

BPW Air bags 4

Spare parts 4.3

Air bags / Spare parts

Item	Designation	Fig.	Designation on the bag	Dimension Ø	L	d	B	C	D	BPW code no.:
			BPW 30..							
1205	Air bag, only	A	**BPW 30**	300	526	-	150	25	73	**05.429.40.03.0**
										05.429.42.76.0
					520	M 18	170	0	0	05.429.41.25.0
						M 20	158			05.429.42.54.0
					523	-	150		73	05.429.42.03.0
			BPW 30 K		429	-	150	25	73	**05.429.40.91.0**
										05.429.42.77.0
					423	M 18	170	0	0	05.429.41.56.0
						M 20	158			05.429.41.77.0
						-	150		73	05.429.42.04.0
			BPW 36..							
			BPW 36	360	530	-	210	25	95	**05.429.40.01.0**
			BPW 36 K		430					05.429.41.01.0
			BPW 36-1		610					05.429.40.05.0
			BPW 36-2		789					05.429.41.09.0

Item	Designation	Fig.	Version	Dimension D	d	H1	d1	K		BPW code no.:
			BPW 30..							
1210	Piston	B b	Steel piston	201	194	143	16	139		03.139.00.25.0
		B b				186		172		03.139.00.22.0
		B c	GRP piston	203	-	149	27	135		05.139.39.51.0
		B d		202			29			03.139.39.57.0 *
		B c		203		194	27	180		05.139.39.50.0
		B c					29			05.139.39.58.0
		B d					29			03.139.39.56.0 *
		B e				218	14	184		05.139.39.60.0 *
		B e		202		173		139		05.139.39.61.0 *
			BPW 36..							
		B a	Steel piston	250	244	203	30	-		03.139.00.04.0
		B a				293				03.139.00.17.0
		B b		251		143		129		03.139.39.48.0
		B c	GRP piston	253			27			05.139.39.53.0
		B c				188		174		05.139.39.52.0

* Piston for central screwed air bag

Item	Designation	Fig.	Version	Dimension D	d	H1	d1		BPW code no.:
			BPW 30 Combi Air bag						
1212	Hanger brackets	C	Cast iron	-		123	-		03.375.09.38.0
						168			03.375.09.37.0
1213	Piston	D	Steel piston	200	193	140	25		03.139.00.24.0
						181			03.139.00.23.0

Alternative versions on request.

4 BPW Air bags

4.3 Spare parts

Air bags / Spare parts

Standard air bag

Air bag with steel piston

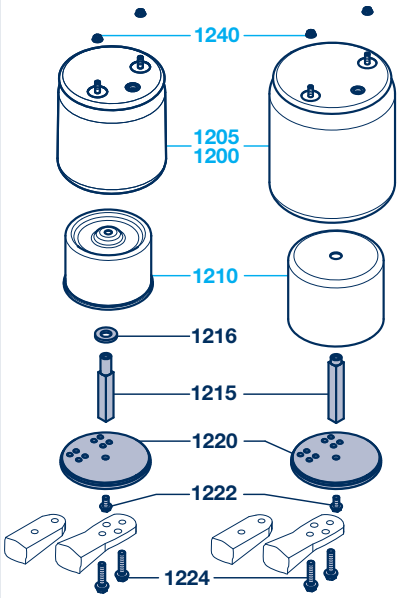

Air bag with GRP piston

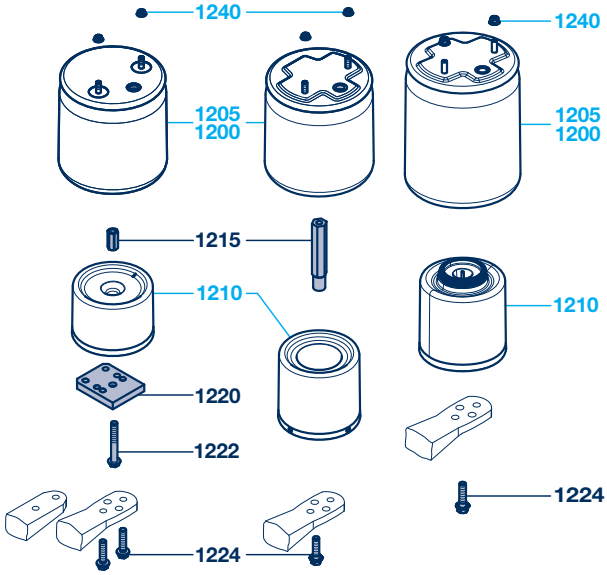

Split bag (Combi Air bag)

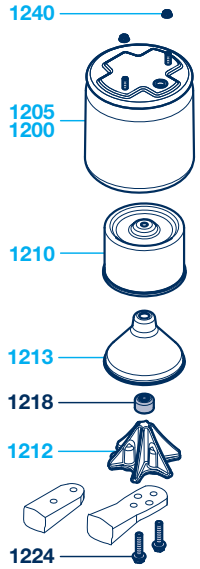

A

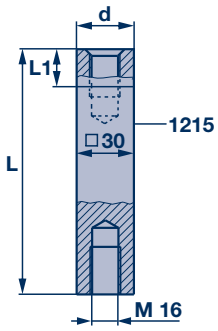

B

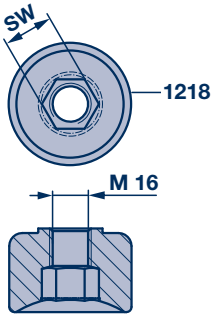

C

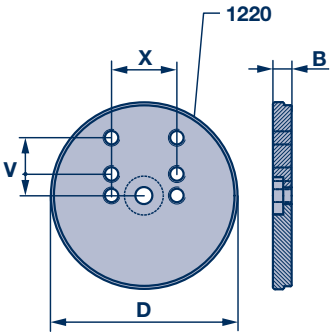

D

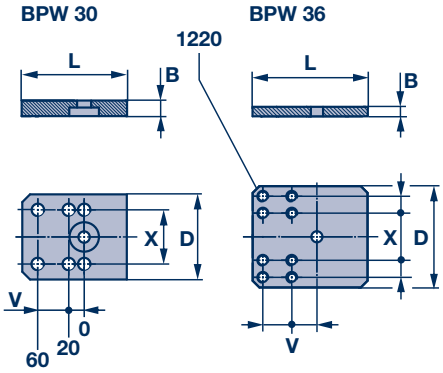

BPW Air bags 4

Spare parts 4.3

Air bags / Spare parts

Item	Designation	Fig.	Applications	Dimension L	Dimension L1	Dimension d		BPW code no.:
			Steel piston					
1215	Bolt	A	**BPW 30 K**	124	48	30		03.084.46.41.0
			BPW 30 K	129	17			03.084.66.36.0
			BPW 30 K / 36 K		48			03.084.46.31.0
			BPW 36	174	17			03.084.66.30.0
			BPW 30 / 30 K / 36 / 36 K		48			03.084.46.28.0
			BPW 30 / 36 / 36-1	209	17			03.084.66.31.0
			BPW 36-2	299				03.084.66.37.0
1216	Ring	-	for bolt **L1 = 48**	Ø 30 / 55 x 5				03.310.31.43.0
			GRP piston					
1215	Threaded sleeve	-	**BPW 30 / BPW 36**	M 16 x 51 / SW 24				03.179.03.08.0
	Bolt		**BPW 30 K** Bag with central screw	M 16 / Ø 30 x 40 / 150 / SW 32				03.084.46.43.0
			BPW 30 Bag with central screw	M 16 / Ø 30 x 40 / 195 / SW 32				03.084.46.42.0
			Combi Air bag					
1218	Nut	B	**BPW 30 / BPW 30 K**	M 16 / SW 19				03.266.02.02.0

Item	Designation	Fig.	Version	Dimension V	Dimension X	Dimension B	Dimension D	Dimension L	BPW code no.:
			BPW 30..						
1220	Plate	D	**BPW 30 / BPW 30 K GFK**	0 / 20 / 60	70	20	110	135	03.280.95.02.0
	Washer	C	**BPW 30 / BPW 30 K**	20			200	-	03.320.09.22.0
			BPW 36..						
1220	Plate	D	**BPW 36 / BPW 36 K GFK**	0 / 55	70 / 120	20	150	170	03.280.95.04.0
				45 / 80					03.280.95.03.0
				80		14			03.280.75.04.0
	Washer	C		45 / 80	70	20	249	-	03.320.09.49.0
					70 / 120		250		03.320.09.35.0
				80	70	14			03.320.09.33.0
				90	120	20			03.320.09.23.0
Attachment central bolt with steel piston									
1222	Locking screw	-		M 16 x 30					03.340.12.21.0
				M 16 x 35					02.5070.94.91
Central screw with GRP piston									
1222	Screw	-	Piston height < 150 mm	M 16 x 115					03.340.12.24.0
			Piston height > 180 mm	M 16 x 160					03.340.12.23.0
Attachment air bag - trailing arm									
1224	Locking screw	-		M 16 x 55					02.5070.97.00
				M 16 x 65					02.5070.95.00
				M 16 x 75					02.5070.96.00
			Bag with central screw	M 16 x 61 / SW 22					02.5071.61.16

Alternative versions on request.

4 BPW Air bags

4.4 Upper air bag attachments / packers

Upper air bag attachments / packers

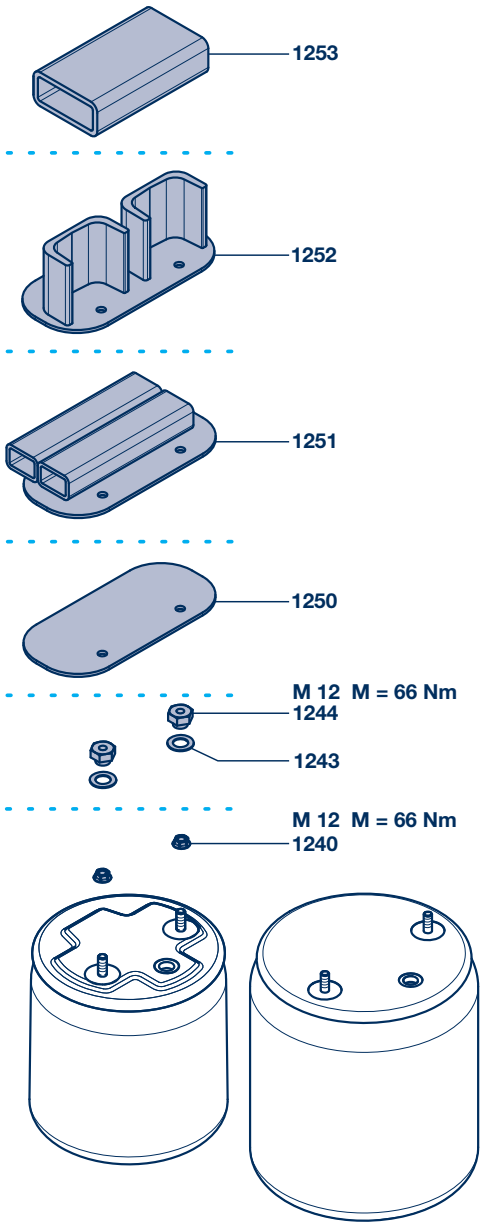

A

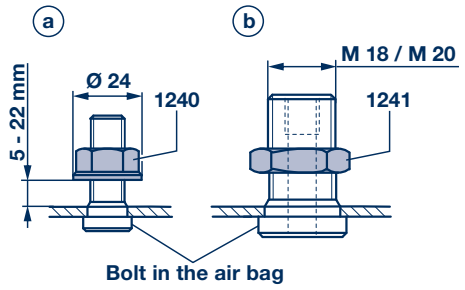

B

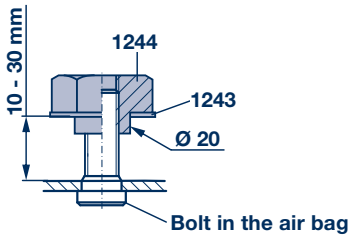

C

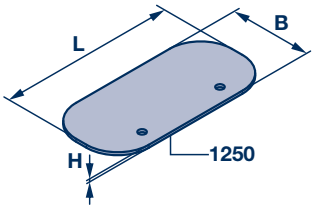

D

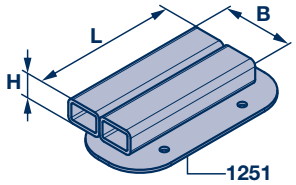

E

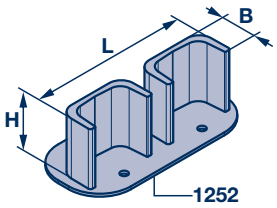

F

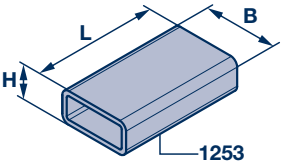

BPW Air bags 4

Upper air bag attachments / packers 4.4

Upper air bag attachments

Item	Designation	Fig.	Applications	Dimension	BPW code no.:
	Steel frame				
1240	Lock nut	A a	**Steel frame 5 - 22 mm**	M 12 / SW 17	02.5273.33.80 *
				M 12 / SW 17	02.5273.29.88
	Steel frame / integrated air connection in stud bolt				
1241	Hexagon nut	A b	**Steel frame 5 - 22 mm**	M 18 / SW 24	02.5230.18.00
				M 20 / SW 30	02.5201.76.06
	Aluminium frame				
1243	Spring washer	B	**Aluminium frame 10 - 30 mm**	B 20 / 137	02.5403.20.90
1244	Hexagon nut			M 12 / Ø 20 / SW 30	03.260.11.01.0

* Will be replaced by 02.5273.29.88

Packers

Item	Designation	Fig.	Applications	Dimension H	Dimension B	Dimension L	BPW code no.:
1250	Plate	C	**BPW 30**	5	140	300	03.281.47.12.0
			BPW 36	5	200	360	03.285.47.24.0
1251	Support	D	**BPW 30**	40	120	240	05.189.07.33.0
				60			05.189.06.93.0
				100			05.189.07.34.0
			BPW 36	40	120	300	05.189.07.11.0
				60			05.189.06.57.0
				100			05.189.07.02.0
1252	Support	E	**BPW 30**	40	60	270	05.189.07.29.0
				60			05.189.07.30.0
				100			05.189.07.28.0
			BPW 36	40	60	300	05.189.07.88.0
				60			05.189.07.89.0
				100			05.189.07.90.0
1253	Square tube	F	**BPW 30**	60	120	200	03.391.69.24.0
				60	140		03.391.69.42.0
				100	120		03.391.53.72.0
			BPW 30 / BPW 36	80	140	120	03.391.69.18.0
				100	120		03.391.52.80.0

5 BPW Shock absorbers

General

BPW Shock absorbers

The purpose of shock absorbers is to rapidly reduce the vibrations occurring between the axle and body during driving. This prevents any further yawing of the body and running gear components, and ensures that the tyres maintain optimum roadholding. The purpose of this road-holding is to ensure that the vehicle tracking remains accurate and that the vehicle brakes correctly.

BPW shock absorbers are matched to the vehicle, overall height, installation position and applications. Using the split air bag (Combi-Air bag + Airlight[Direct]) with air suspensions, the shock absorber is fitted with an end stop in order to avoid any further axle travel.

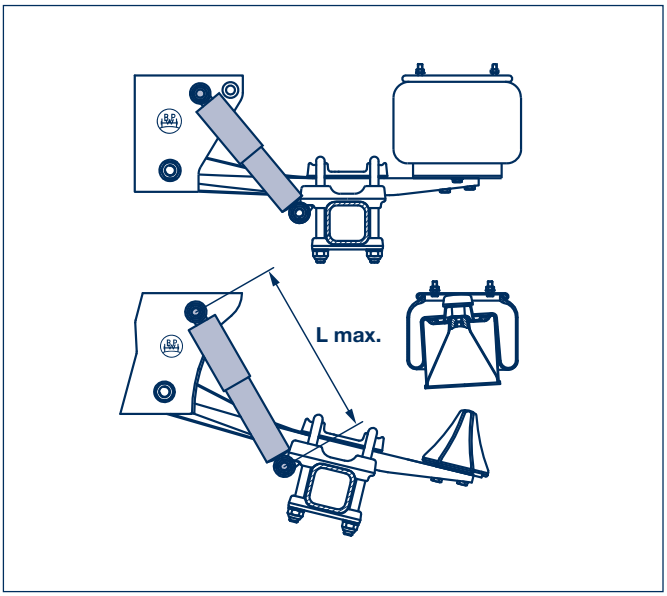

The rubber bushes of BPW shock absorbers can be replaced (see Chap. 5.2).

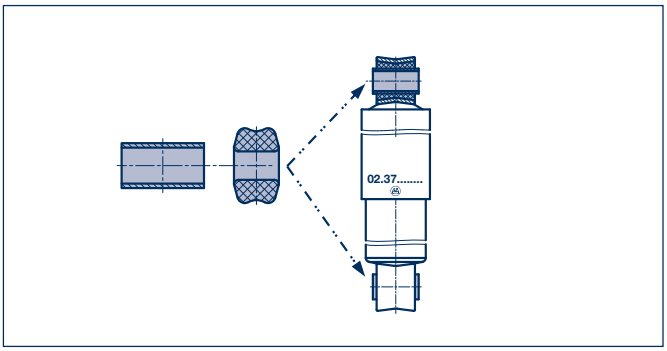

Shock absorbers should only be built in and changed per axle. Individual axles can be equipped in different ways within a multi-axle vehicle.

BPW Shock absorbers 5

General

PDC

The BPW PDC (Pneumatic Damping Control) shock absorber improves driving characteristics and comfort – whatever the load. The best damping, better road safety, lower maintenance costs – given all these reasons, you don't need to think long and hard before fitting or retrofitting BPW air suspension kits with PDC.

How it works

The disadvantage with conventional shock absorbers is that their characteristics can only be optimally adapted to one loading condition (usually fully laden). PDC shock absorbers detect the actual loading condition via the air suspension and adapts itself smoothly. This improves driving safety at the same time as reducing the strain on the running gear and the vehicle, in particular when the trailer is empty or only partly laden. PDC shock absorbers are virtually essential in high-value vehicles and when carrying sensitive cargoes. Vehicle maintenance costs are reduced. The cargo and the carriageway are also subjected to fewer shock loads. PDC is connected to the BPW air suspension system and does not require any electronic control systems.

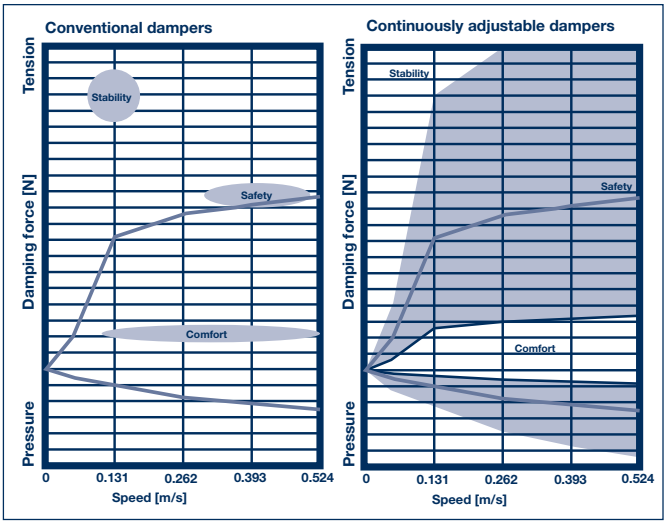

☞ **When using PDC shock absorbers, a distance washer as well as shorter lock nuts must be used in each case between support or spring pad and PDC.**

5 BPW Shock absorbers

5.1 Shock absorbers

O
SL
AL
EA
AC

Shock absorber (item 1300)

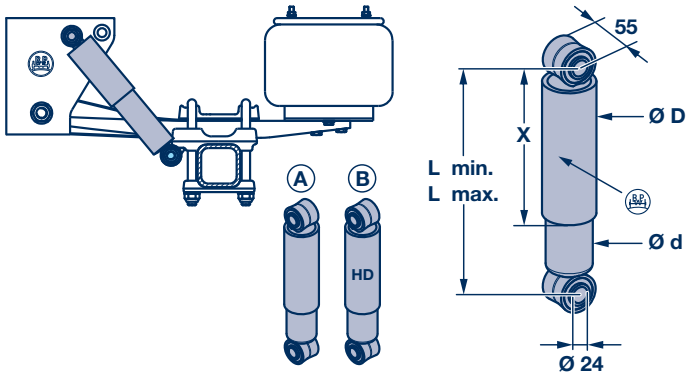

Installation diagram

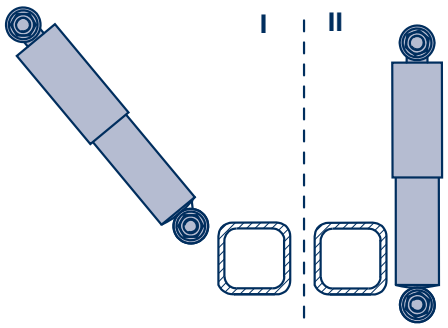

Installation diagram	BPW code no.: Shock absorber old with steel and rubber bushes Ø 24 / 30	BPW code no.: Shock absorber new with steel and rubber bushes Ø 24 / 32	Exec.	Dimension L min.	Dimension L max.	Dimension X	Dimension D	Dimension d	N = Newton at 13 cm/s	N = Newton at 52 cm/s	Remark
Standard shock absorber											
I	02.3722.79.00	02.3722.79.02	A	287	412	204	75	65	13280 / 2930	15250 / 5010	
I		02.3732.05.02	B			195	74		6300 / 1740	17000 / 3000	EA / EAC HD
I	02.3702.70.00 [1]	-	A	292	432	214	82	72	6300 / 1600	17000 / 3000	rep. by 02.3722.89.02
I	02.3722.89.00	02.3722.89.02	A	292	432	204	75	65	13280 / 2930	15250 / 5010	
I		02.3732.07.02	B			195	74		6300 / 1740	17000 / 3000	EA / EAC HD
I	02.3702.52.00	-	A	326	496	235	82	72	6300 / 1740	17000 / 3000	rep. by 02.3722.83.02
I	02.3722.14.00	-	A						10500 / 2500	22500 / 4500	rep. by 02.3722.83.02
I	02.3722.04.00	02.3722.04.02	A				75	65	6300 / 1740	17000 / 3000	HD
I		02.3722.04.02	B			255	74		6300 / 1740	17000 / 3000	EA / EAC HD
I	02.3722.83.00	02.3722.83.02	A	326	496	235	75	65	13280 / 2930	15250 / 5010	
I	02.3702.92.00	-	A	351	541	250	82	72	8000 / 2500	18000 / 5000	rep. by 02.3722.88.02
I	02.3722.88.00	02.3722.88.02	A	351	541	250	75	65	13280 / 2930	15250 / 5010	
I		02.3732.06.02	B			255	74		6300 / 1740	17000 / 3000	EA / EAC HD
I	02.3702.20.00	02.3702.20.02	A	426	696	325	82	72	8000 / 1290	16000 / 2150	
I II	02.3702.51.00	02.3702.51.02	A	430	700	330	75	66	3800 / 500	8000 / 800	
II	02.3702.67.00	02.3702.67.02	A	466	766	380	75	60	3750 / 540	10500 / 1000	
I II	02.3702.60.00 [2]	02.3702.60.02 [2]	A	475	795	390	82	72	6300 / 1600	17000 / 3000	
II	02.3702.18.00	02.3702.18.02	A	475	800	390	82	72	4100 / 400	9000 / 900	
II	02.3722.62.00	02.3722.62.02	A	536	906	440	75	60	3750 / 540	10500 / 1000	

	Shock absorbers with last digit ..**0** are replaced by shock absorber with last digit ..**2**. Observe replacement bushes.	[1] Special version [2] Reinforced

Alternative versions on request.

BPW Shock absorbers 5

Shock absorbers 5.1

Shock absorber (item 1300)											
Installation diagram	BPW code no.: Shock absorber old with steel and rubber bushes Ø 24 / 30	BPW code no.: Shock absorber new with steel and rubber bushes Ø 24 / 32	Exec.	Dimension L min.	Dimension L max.	Dimension X	Dimension D	Dimension d	N = Newton at 13 cm/s	N = Newton at 52 cm/s	Remark
PDC Shock absorber (Pneumatic Damping Control)											
I	02.3722.63.00	02.3722.63.02 *1		336	501	211	92	80	for air bag **BPW 30**		
I	02.3722.64.00	02.3722.64.02 *2		336	501	211	92	80	for air bag **BPW 36**		
	Shock absorbers with last digit ..**0** are replaced by shock absorber with last digit ..**2**. Observe replacement bushes.										

Alternative versions on request.

*1 Discontinued item! After the remaining stocks have been used up, the PDC shock absorbers must be replaced by appropriate series shock absorbers. In addition, the air suspension system must be sealed.

*2 No longer available! If replacement is required, the PDC shock absorbers must be replaced by appropriate series shock absorbers. In addition, the air suspension system must be sealed.

5 BPW Shock absorbers

5.2 Spare parts for shock absorbers

O
SL
AL

Shock absorber mounts

Version	Item	Designation	BPW code no.:	Dimension
for shock absorber with last digit ..**0**	1303	Steel bush	02.0316.21.00	Ø 24 / **30** x 55
	1304	Rubber bush	02.2805.01.00	Ø 19 / 50 x 30
Shock absorber with last digit ..**2**	1302	**Repair kit bush for shock absorber mount** Item 1303 + 1304	**09.801.08.18.0**	**09.801.08.18.0**
	1303	Steel bush *	02.0314.39.00	Ø 24 / **32** x 55
	1304	Rubber bush *	02.2805.10.00	Ø 23 / 50 x 25

Steel and rubber bushes with Ø 24 / 30 mm are no longer available - convert to steel and rubber bushes with Ø 24 / 32 mm.

* only available as kit (**09.801.08.18.0**)!

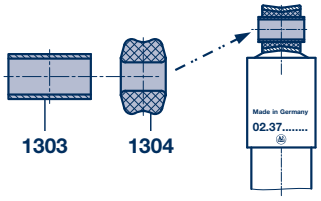

Changing the bushes

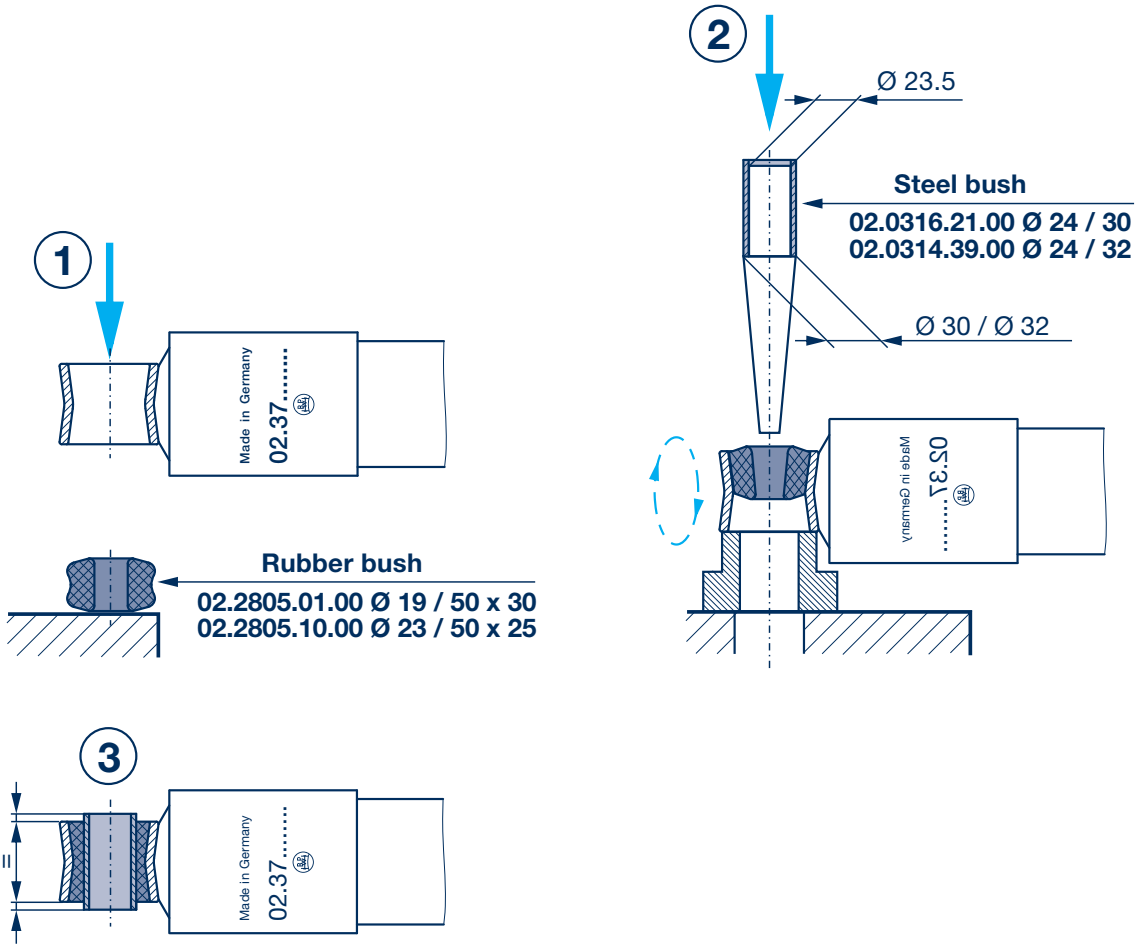

☞ **Lubricate the rubber and steel bush with a 50% soap solution prior to assembly!**

BPW Shock absorbers 5

Upper shock absorber attachments 5.3

Upper shock absorber attachment with threaded bolts

Shock absorber front

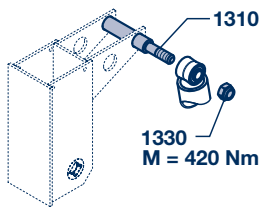

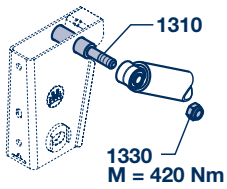

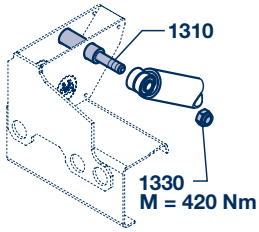

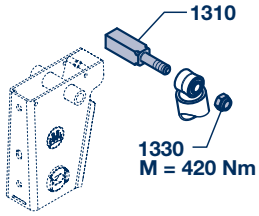

Shock absorber rear

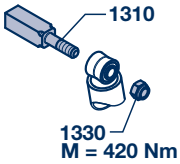

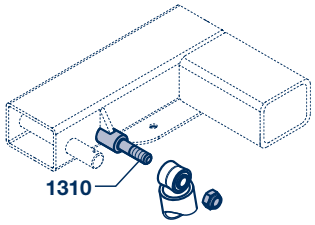

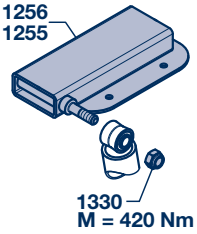

Item	Designation	Dimension A	Dimension B	BPW code no.:
Shock absorber attachment on threaded bolts, steel hanger brackets / channel cross member / frames				
1310	Threaded bolt (steel) (welded to hanger bracket, channel cross member or frame)	● 36	165	03.177.24.36.0
		● 40	140	03.177.24.30.0
		● 40	147	03.177.24.53.0
		● 40	165	03.177.24.29.0
		● 40	188	03.177.24.31.0
		■ 40	82	03.177.24.37.0
		■ 40	115	03.177.24.38.0
		■ 40	140	03.177.24.17.0
		■ 40	167	03.177.24.52.0
		■ 40	207	03.177.24.49.0
Shock absorber attachment on threaded bolts, stainless steel hanger brackets				
1310	Threaded bolt (stainless steel) (welded to hanger bracket)	● 40	130	03.177.24.64.0
		● 40	145	03.177.24.61.0
		● 50	130	03.177.24.65.0

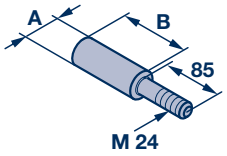

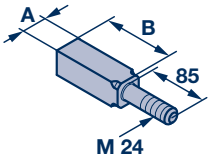

Item	Designation	Dimension A	Dimension X	BPW code no.:
Shock absorber rear, attachment to packer for air bag				
1255	Support, left	150	57	05.189.06.35.0
		210	37	05.189.06.25.0
1256	Support, right	150	57	05.189.06.34.0
		210	37	05.189.06.26.0

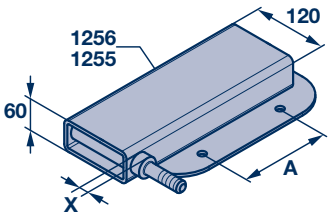

1329	Washer	A 25	02.5401.25.07	* With PDC shock absorbers, use lock nut 02.5220.76.12 + washer 02.5401.25.07
1330	Lock nut	VM 24 / 980-10	**02.5220.74.12** *	
		VM 24 / 980-10 short	02.5220.76.12	

Alternative versions on request.

5 BPW Shock absorbers

5.3 Upper shock absorber attachments

O
SL
AL

Upper shock absorber attachment with screws

Shock absorbers next to steel hanger bracket / channel cross member / frame

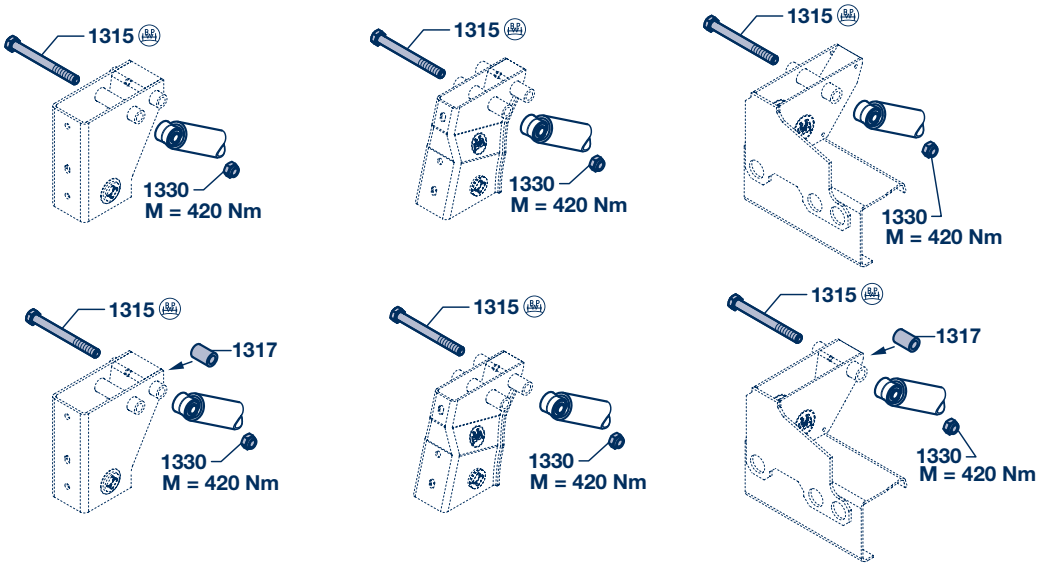

Item	Designation	Dimension L		BPW code no.:
Shock absorbers next to hanger bracket, steel hanger bracket				
1315	Hexagon screw	144	M 24 x 230	02.5023.41.82
		155	M 24 x 240	03.340.14.19.0
		187	M 24 x 275	03.340.14.12.0
1317	Sleeve		Ø 25 / 40 x 55 [1]	03.200.75.62.0
Shock absorber above the spring, shock absorber in support centre				
1315	Hexagon screw	72	M 24 x 100	03.340.14.15.0
		80	M 24 x 110	03.340.14.16.0
		125	M 24 x 160	03.340.14.22.0
				02.5023.39.82
		157	M 24 x 200	02.5023.35.82
		187	M 24 x 230	02.5023.41.82
1318	Ring (2x)	B = 67	Ø 25 / 50 x 6	03.310.30.60.0
		B = 90	Ø 25 / 42 x 17.5	03.310.31.38.0
1330	Lock nut	VM 24 / 980-10		02.5220.74.12 *

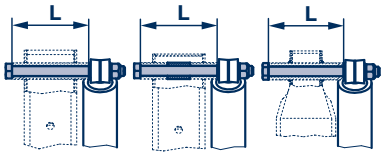

[1] inside dimension of the hanger bracket = 55 mm

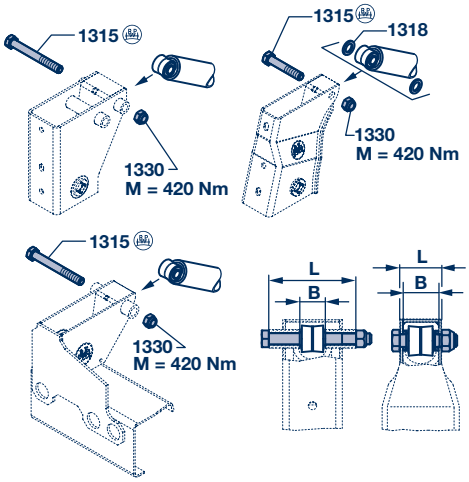

* With PDC shock absorbers, use lock nut 02.5220.76.12 + washer 02.5401.25.07

BPW Shock absorbers 5

Upper shock absorber attachments 5.3

Upper shock absorber attachment with screws

Shock absorber attachment between plates, steel hanger bracket / channel cross member / frame

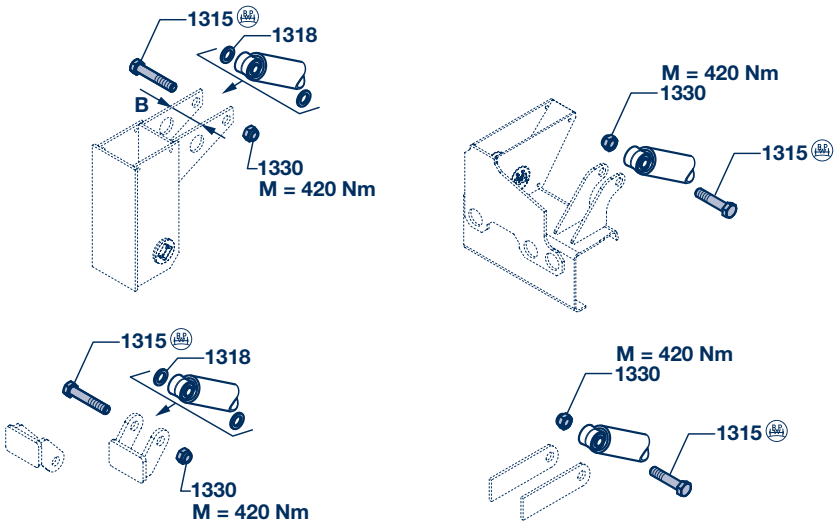

		Dimension				
Item	**Designation**	**B**	**L**		**BPW code no.:**	
Shock absorber attachment between plates, steel hanger bracket / channel cross member / frame						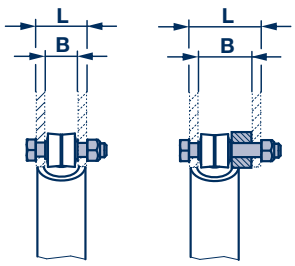
1315	Hexagon screw	55	75	M 24 x 100	03.340.14.15.0	
		70	90	M 24 x 120	02.5023.29.80	
		76	96	M 24 x 140	02.5023.49.80	
1318	Ring (1x)	70	90	Ø 25 / 42 x 15	03.310.31.21.0	
	Ring (2x)	76	96	Ø 25 / 42 x 10	03.310.31.40.0	
1330	Lock nut	VM 24 / 980-10			02.5220.74.12	

Alternative versions on request.

5 BPW Shock absorbers

5.3 Upper shock absorber attachments

O
SL
AL

Upper shock absorber attachment with screws

Item	Designation	Dimension	BPW code no.:
Shock absorbers next to hanger bracket, aluminium hanger bracket			
1315	Hexagon screw	M 24 x 275-8.8	03.340.14.12.0
1317	Sleeve	Ø 25 / 40 x 55 [1]	03.200.75.62.0
1318	Ring (2x)	Ø 25 / 42 x 15	03.310.31.21.0
		[1] inside dimension of the hanger bracket = 55 mm	

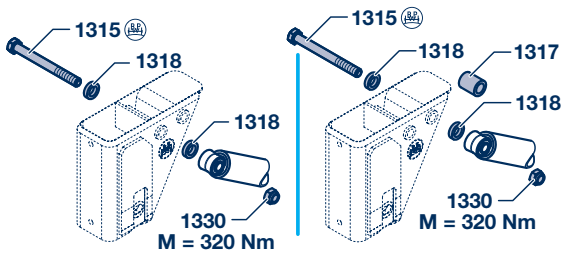

Shock absorber above the spring, shock absorber in support centre, aluminium hanger bracket			
1315	Hexagon screw	M 24 x 200	**03.340.14.21.0**
			02.5023.35.82
1318	Ring (2x)	Ø 25 / 50 x 6	03.310.30.60.0
1329	Washer (2x)	Ø 25 / 125	02.5401.25.07

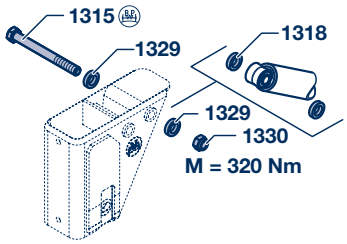

Shock absorbers next to hanger bracket, cast aluminium hanger bracket			
1315	Hexagon screw	M 24 x 240-8.8	03.340.14.19.0
		M 24 x 275-8.8	**03.340.14.12.0**
1317	Bush	Ø 25 / 40 x 67 [2]	03.112.03.07.0
1318	Ring	Ø 25 / 42 x 15	03.310.31.21.0
1329	Washer	Ø 25 / 125	02.5401.25.07
	Ring	Ø 25 / 50 x 6	03.310.30.60.0
		Ø 25 / 42 x 10	03.310.31.40.0
		[2] inside dimension of the hanger bracket = 67 mm / no longer available	

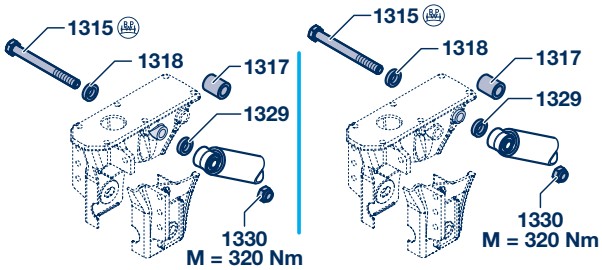

Shock absorber above the spring, shock absorber in support centre, cast aluminium hanger bracket			
1315	Hexagon screw	M 24 x 200	03.340.14.21.0
1318	Ring	Ø 25 / 50 x 6	03.310.30.60.0
1329	Washer	Ø 25 / 125	02.5401.25.07

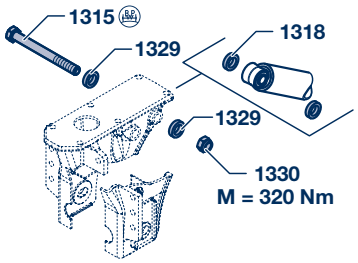

1330	Lock nut	VM 24 / 980-10	02.5220.74.12

BPW Shock absorbers 5

Lower shock absorber attachments 5.4

Lower shock absorber attachment

Item	Designation	Dimension	BPW code no.:
AL **attachment to axle plate with hexagon screw** **Shock absorber front**			
1026	Axle plate, right		see page 26 - 33
1027	Axle plate, left		see page 26 - 33
1324	Hexagon screw	M 24 x 83-8.8	03.340.14.37.0

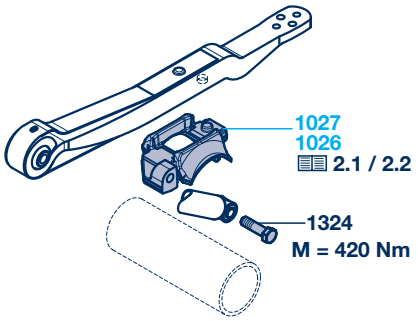

O / SL / AL **attachment to axle plate with threaded bolt,** **Shock absorber front**			
1026	Axle plate, right		see page 26 - 33
1027	Axle plate, left		see page 26 - 33

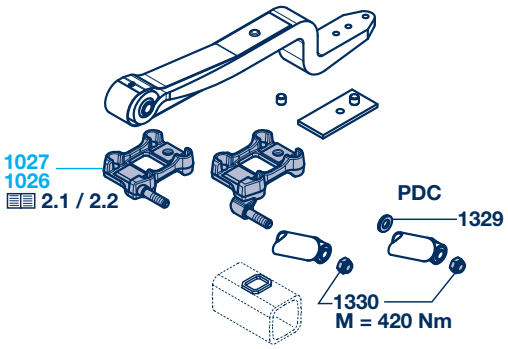

OM / SLM **Shock absorber rear**			
1320	Support, right	X = 150	05.189.05.66.0
1321	Support, left	X = 150	05.189.05.67.0
1322	U-bolts		03.138.29.02.0 [1]
1323	Lock nut	VM 16 x 1.5 / 980-10	02.5220.31.12

[1] no longer available - deleted without replacement

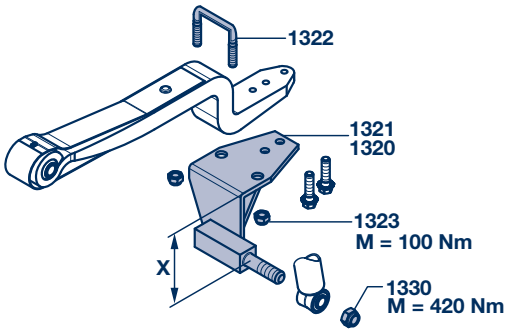

OM / SLM / ALM **Shock absorber rear,** **attachment to support with threaded bolt**			
1320	Support, right	X = 44,5 / B = 150	05.189.13.16.0
		X = 92 / B = 180	05.189.13.30.0
		X = 126 / B = 150	05.189.13.20.0
1321	Support, left	X = 150 / B = 150	05.189.13.15.0
		X = 92 / B = 180	05.189.13.29.0
		X = 126 / B = 150	05.189.13.21.0

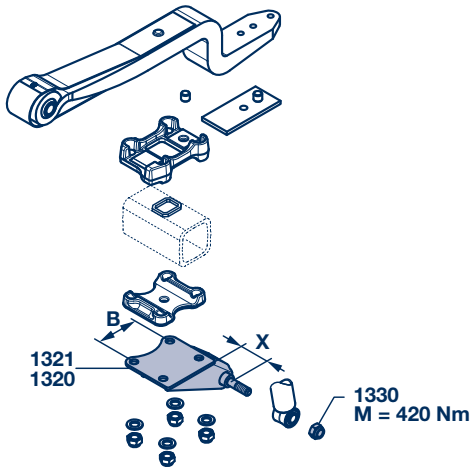

1329	Washer	A 25	02.5401.25.07
1330	Lock nut	VM 24 / 980-10	**02.5220.74.12** *
		VM 24 / 980-10 short	02.5220.76.12

* With PDC shock absorbers, use lock nut 02.5220.76.12 + washer 02.5401.25.07

5 BPW Shock absorbers

5.4 Lower shock absorber attachments

O
SL
AL

Lower shock absorber attachment

Item	Designation	Applications	Dimension	BPW code no.:
Lower shock absorber attachment between plates				
	B = 56			
1324	Hexagon screw		M 24 x 110	02.5023.46.80
	B = 76			
1318	Ring		Ø 25 / 42 x 10	03.310.31.40.0
1320	Support	□ / ■ 120	H 51 / V 66	05.189.15.17.0
		■ 120	H 125 / V 60	05.189.10.51.0
		■ 120	H 157 / V 65	05.189.10.92.0
		■ 120	H 185 / V 60	05.189.10.44.0
1324	Hexagon screw		M 24 x 130	02.5023.47.82
	B = 90			
1311	Repair kit cpl. Item 1318 - 1330	□ / ■ 120		09.829.00.02.0
1318	Ring		Ø 25 / 42 x 17.5	03.310.31.38.0
1320	Support	□ / ■ 120	H 140 / V 100	05.189.07.15.0
		□ / ■ 150	H 110 / V 85	05.189.07.16.0
1324	Hexagon screw		M 24 x 140	02.5023.49.80
	B = 100			
1318	Sleeve		Ø 25 / 42 x 22	03.200.74.44.0
1324	Hexagon screw		M 24 x 160	02.5023.39.82
1330	Lock nut		VM 24 / 980-10	02.5220.74.12

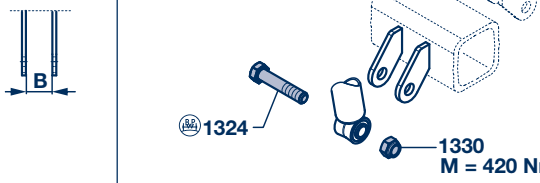

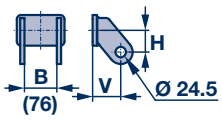

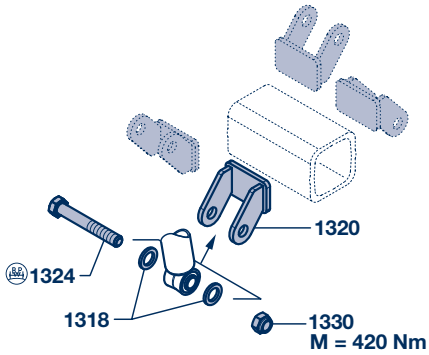

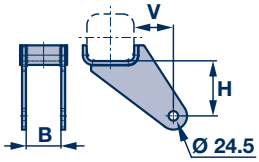

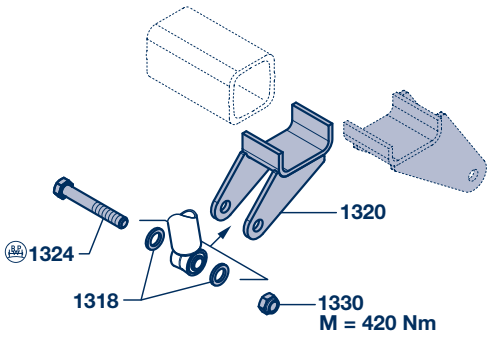

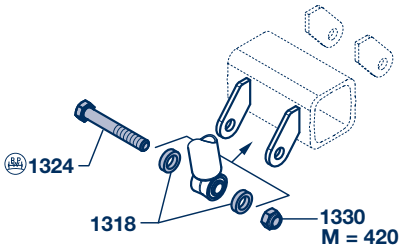

BPW Shock absorbers 5

Lower shock absorber attachments 5.4

O
SL
AL

Lower shock absorber attachment

Item	Designation	Dimension	BPW code no.:
O / SL / AL **Attachment to double segment above the trailing arm, spring U-bolts mounted from above**			
1035	Spring plate		see Chap. 2.3
1324	Hexagon screw	M 24 x 100-8.8	03.340.14.15.0

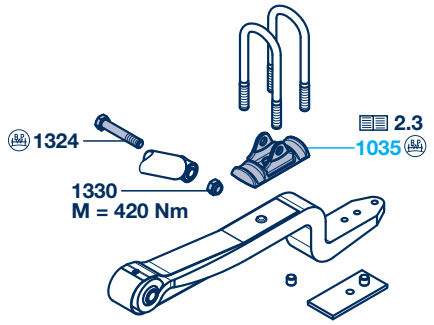

O / SL / AL **Attachment to double segment with threaded bolt welded on, spring U-bolts mounted from above**			
1035	Spring plate		see Chap. 2.3

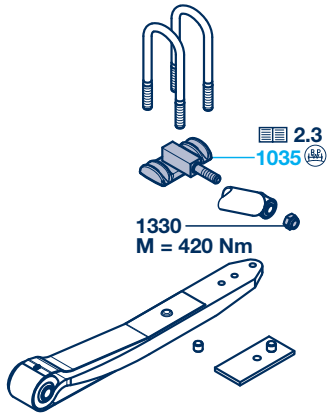

O / SL / AL **Attachment to spring plate above the trailing arm, spring U-bolts mounted from below**			
1032	Spring plate		see Chap. 2.3
1324	Hexagon screw	M 24 x 100-8.8	03.340.14.15.0

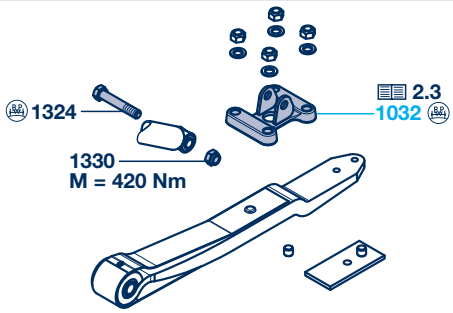

O / SL / AL **Attachment to spring plate with threaded bolt welded on, spring U-bolts mounted from below**			
1032	Spring plate		see Chap. 2.3

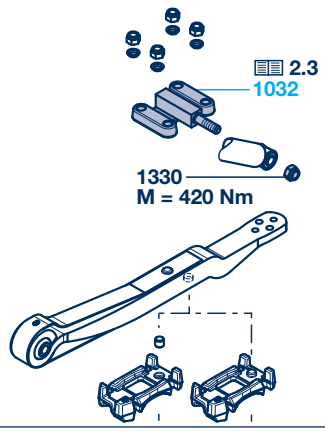

1329	Washer	A 25	02.5401.25.07	* With PDC shock absorbers, use lock nut 02.5220.76.12 + washer 02.5401.25.07
1330	Lock nut	VM 24 / 980-10	**02.5220.74.12** *	
		VM 24 / 980-10 short	02.5220.76.12	

5 BPW Shock absorbers

5.4 Lower shock absorber attachments

O
SL
AL

Lower shock absorber attachment

Item	Designation	Dimension	BPW code no.:
OT / SLU / ALU **Attachment to spring plate with threaded bolt welded on, spring U-bolts mounted from above**			
1032	Spring plate, right		see Chap. 2.3
1033	Spring plate, left		see Chap. 2.3

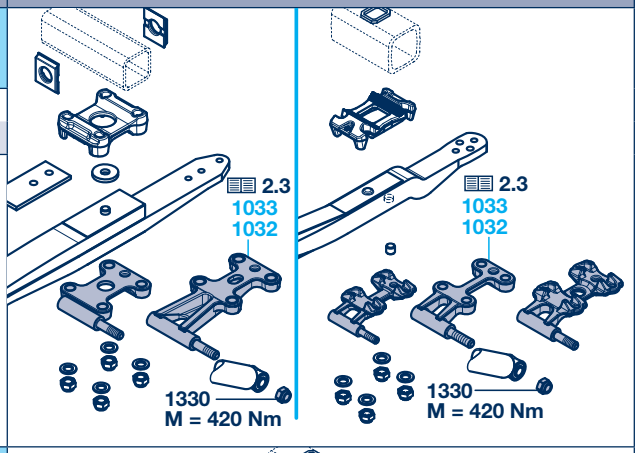

OT / SLU / ALU **Attachment to spring plate with threaded bolt, spring U-bolts mounted from below**			
1032	Spring plate, right		see Chap. 2.3
1033	Spring plate, left		see Chap. 2.3

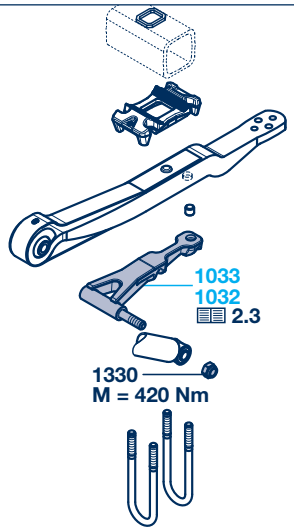

OT / SLU / ALU **Attachment to spring plate with screw, spring U-bolts mounted from above**			
1032	Spring plate, right		see Chap. 2.3
1033	Spring plate, left		see Chap. 2.3
1315	Hexagon screw	M 24 x 140-8.8	02.5023.49.80
Screw (item 1315) and lock nut (item 1330) are included in spring plate 05.145.....			

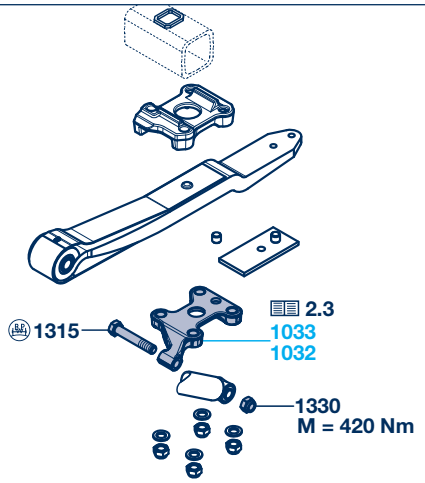

1329	Washer	A 25	02.5401.25.07	* With PDC shock absorbers, use lock nut 02.5220.76.12 + washer 02.5401.25.07
1330	Lock nut	VM 24 / 980-10	**02.5220.74.12** *	
		VM 24 / 980-10 short	02.5220.76.12	

BPW Shock absorbers 5

Lower shock absorber attachments 5.4

Lower shock absorber attachment

Item	Designation	Dimension	BPW code no.:
OT / SLU / ALU **Attachment to spring plate with threaded bolt screwed on, spring U-bolts mounted from below, shock absorber front**			
1035	Spring plate		see Chap. 2.3
1168	Lock nut	M 30	03.260.15.01.0
1324	Threaded bolt	M 24 / M 30 / L = 260	03.177.24.22.0
1327	Sleeve *	Ø 32 / 38 x 68	03.200.73.53.0

* not applicable with U-stabilizer

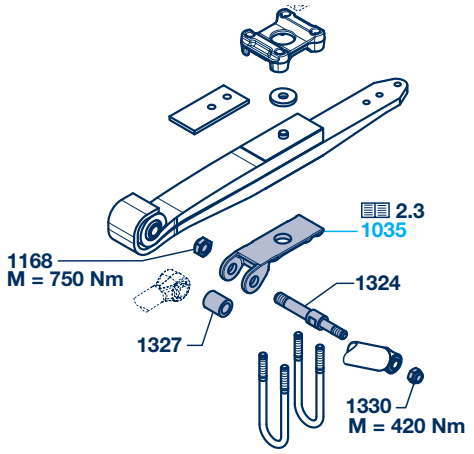

OT / SLU / ALU **Attachment to spring plate with threaded bolt screwed on, spring U-bolts mounted from below, shock absorber rear**			
1035	Spring plate		see Chap. 2.3
1168	Lock nut	M 30	03.260.15.01.0
1324	Threaded bolt	M 24 / M 30 / L = 260	03.177.24.22.0
1327	Sleeve *	Ø 32 / 38 x 68	03.200.73.53.0

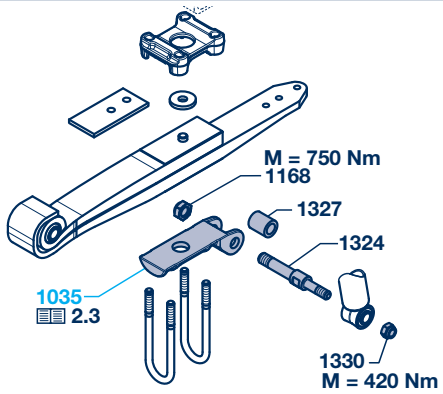

SL / AL **Attachment to spring plate with screw, spring U-bolts mounted from below**			
1032	Spring plate, right		see Chap. 2.3
1033	Spring plate, left		see Chap. 2.3
1315	Hexagon screw	M 24 x 140-8.8	02.5023.49.80

Screw (item 1315) and lock nut (item 1330) are included in spring plate 05.145.....

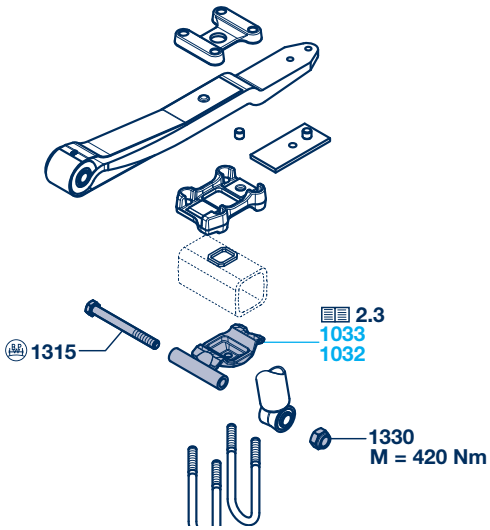

1329	Washer	A 25	02.5401.25.07
1330	Lock nut	VM 24 / 980-10	**02.5220.74.12** *
		VM 24 / 980-10 short	02.5220.76.12

* With PDC shock absorbers, use lock nut 02.5220.76.12 + washer 02.5401.25.07

6 BPW Catch straps

6.1 Catch straps

O

SL

AL

Check straps				
Item	Designation	Dimension	BPW code no.:	
		L	Catch straps, standard	Catch straps, PVC coated
1360	Catch strap	730	05.327.14.15.0	-
		865	05.327.14.13.0	-
		940	05.327.14.04.0	05.327.14.37.0
		1010	05.327.14.05.0	05.327.14.30.0
		1060	05.327.14.06.0	05.327.14.31.0
		1120	05.327.14.03.0	05.327.14.25.0
		1160	05.327.14.02.0	05.327.14.24.0
		1220	05.327.14.01.0	05.327.14.23.0
		1270	05.327.14.09.0	05.327.14.26.0
		1330	05.327.14.08.0	05.327.14.29.0
		1350	05.327.14.19.0	05.327.14.32.0
		1390	05.327.14.14.0	05.327.14.28.0
		1415	05.327.14.10.0	05.327.14.35.0
		1455	05.327.14.07.0	05.327.14.27.0
		1500	05.327.14.11.0	05.327.14.36.0
		1550	05.327.14.12.0	-
		1570	05.327.14.18.0	05.327.14.33.0
		1685	05.327.14.20.0	05.327.14.34.0
		1775	05.327.14.21.0	-

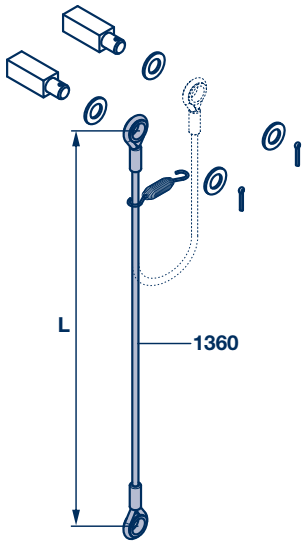

BPW Catch straps 6

Catch strap attachments 6.2

O
SL
AL

Catch strap attachments

Item	Designation	Remark	BPW code no.:	Dimension		
Catch strap attachment with threaded bolt						
			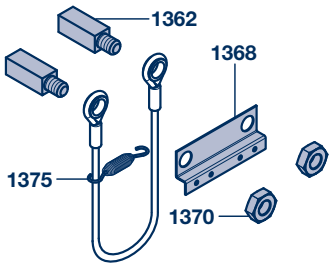		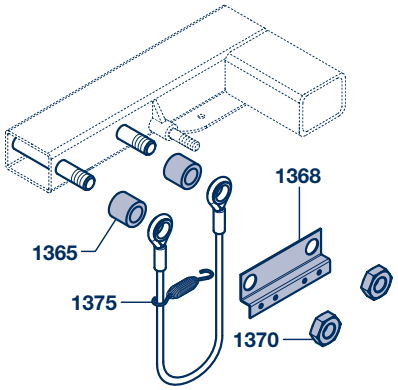	
			O / SL / AL		**OR / SLR / ALR (with frame)**	
1362	Threaded bolt		03.177.25.05.0	M 30 / ■ 40 x 70/110	-	
			03.177.25.06.0	M 30 / ■ 40 x 110/150	-	
1365	Sleeve	FM 900 - 980	-		03.200.74.38.0	Ø 34 / 54 x 48
1368	Shaped plate		03.161.16.01.0 *		03.161.16.01.0 *	
1370	Hexagon nut		02.5205.17.04	M 30 / 936-04	02.5205.17.04	M 30 / 936-04
1375	Return spring		05.397.26.03.0	Ø 26 / 2.6 x 148	05.397.26.03.0	Ø 26 / 2.6 x 148
* no longer available						
Catch strap attachment with split pin						
			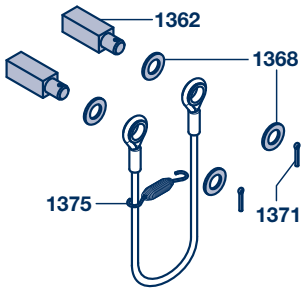		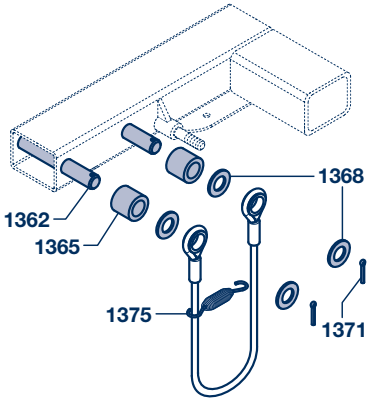	
1362	Bolt		03.084.47.11.0	Ø 30 / ■ 40 x 70/112	-	
		FM 900 - 980	-		03.084.76.37.0	Ø 30 x 218
1365	Sleeve	FM 900 - 980	-		03.200.74.38.0	Ø 34 / 54 x 48
1368	Washer		02.5401.31.01	31 / 125	02.5401.31.01	31 / 125
1371	Split pin		02.6201.61.01	6.3 x 45 / 94	02.6201.61.01	6.3 x 45 / 94
1375	Return spring		05.397.26.03.0	Ø 26 / 2.6 x 148	05.397.26.03.0	Ø 26 / 2.6 x 148

7 BPW Air suspension hanger brackets

General

O

SL

AL

BPW Air suspension hanger brackets

Air suspension hanger brackets transfer all control, braking and acceleration forces from the axle to the vehicle frame.

Short, adjustable BPW air suspension hanger brackets with integrated shock absorber attachments make installation easier, reduces weight and reduces the lateral forces on the vehicle's frame. The vehicle manufacturer benefits from straightforward crossbracing options at the interface between the frame and the hanger bracket.

BPW air suspension hanger brackets are available in steel as well as in stainless steel and aluminium if required.

Complete frames are no longer available.

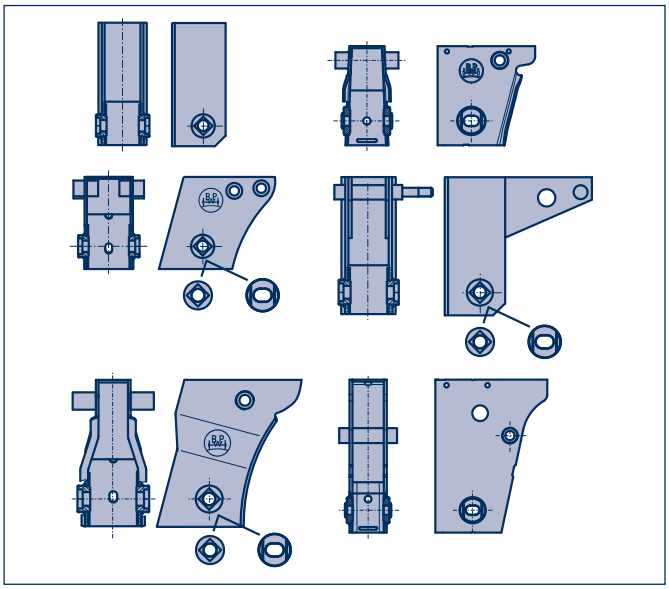

BPW Channel cross member

Vehicle manufacturers all over the world quickly appreciate the assembly benefits of this module.

Whether it's the hanger brackets, the shock absorber attachments or the cross-braces, everything is integrated to save space. Even steering axles can be connected to it without additional preparation.

The channel cross member is available in two versions – with an open, narrow hanger bracket for welding or with a cover plate for bolting/riveting onto the vehicle frame.

The channel cross member can even make additional cross-members unnecessary, depending on the frame design.

BPW order numbers for channel cross members upon request!

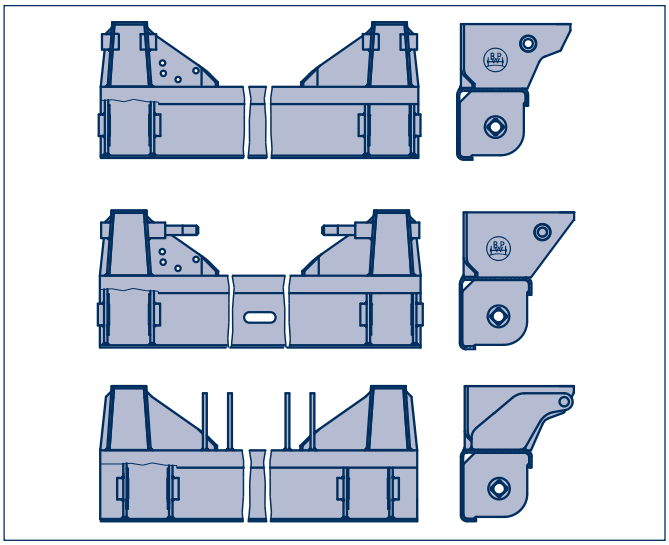

Track alignment

Rapid axle alignment is possible using BPW hanger brackets with integrated track adjustment: Without having to loosen the spring U-bolt, production tolerances on the vehicle can be equalised or wheelbases corrected (axle tracking).

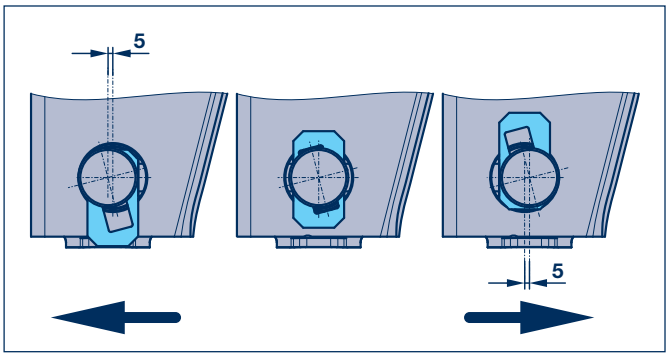

Spare parts for ECO Air (EA) air suspensions see Chap. 11.

Spare parts for ECO Air COMPACT (AC) air suspensions see Chap. 12.

BPW Air suspension hanger brackets 7

General

Greater flexibility for vehicle manufacturers - the bolted Airlight II air suspension hanger brackets from BPW

With the new, innovative bolted Airlight II air suspension hanger brackets, BPW is offering the opportunity of pre-fabricating compact vehicle frames without air suspension hanger brackets, coating them but not attaching the axle and suspension unit until the final assembly stage.

By expanding the Airlight II range, BPW is offering vehicle manufacturers an attractive alternative to the conventional, fully welded chassis. This is because the bolted system offers clear logistical and cost advantages, in particular for off-site frame production and surface coating. Production is made more flexible.

The air suspension hanger brackets are available from week 36/2017 onwards and like all other Airlight II air suspension hanger brackets and channel cross members, they are designed for use with M 24 trailing arm spring bolts from the start of series production (see also BPW News Luft 7122702e).

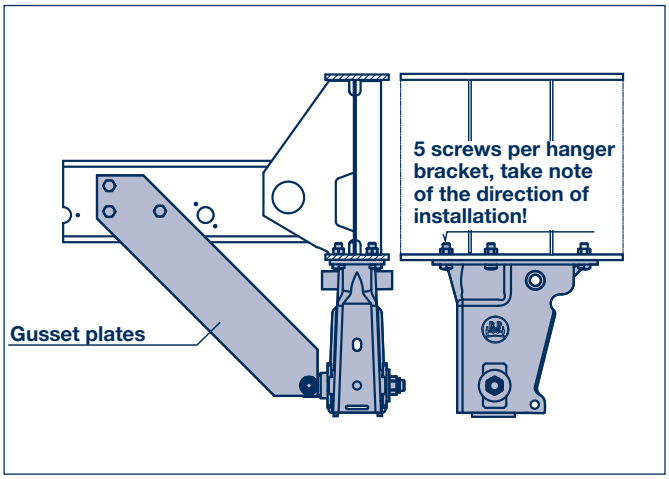

Customer advantages:

- Installation of the entire running gear (incl. bracket struts) by cold-joining technology
- Significant cost and logistical advantages with off-site frame production and surface coating (it is easier to transport the vehicle frame without hanger brackets)
- Expansion of production flexibility
- For mounting on standard frames with bottom flange width as little as 120 mm
- No changes to the frame required, except for the hole pattern
- Suitable for alu frame
- Improved reparability

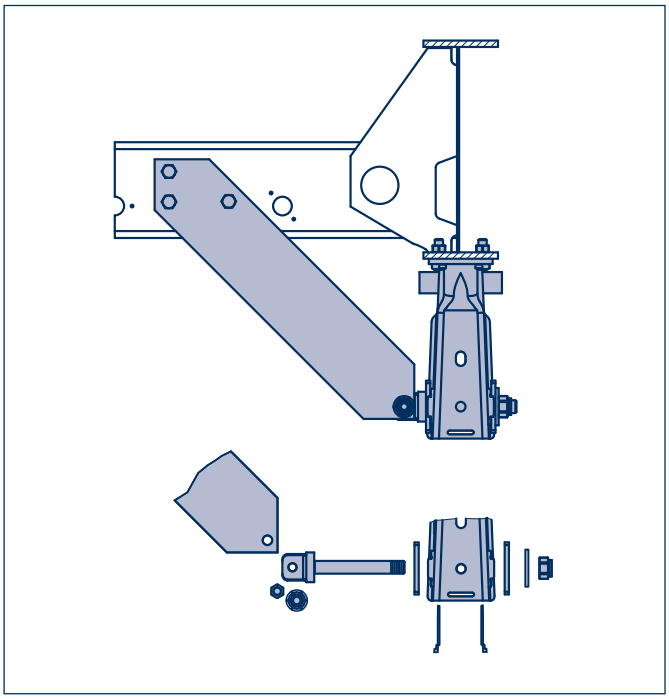

7 BPW Air suspension hanger brackets

General

O

SL

AL

Chock absorber fastening

Hanger brackets with welded bolts for shock absorber attachment (100 mm wide trailing arm) replaced by hanger brackets for shock absorber attachments with screws.

Adjustable hanger brackets

Adjustable hanger brackets and channel cross members with weld-in square frame for spring pivot bolt bearing have been replaced by hanger brackets and channel cross members with weld-in slot bush.

If replacement is required, change over to this new version.

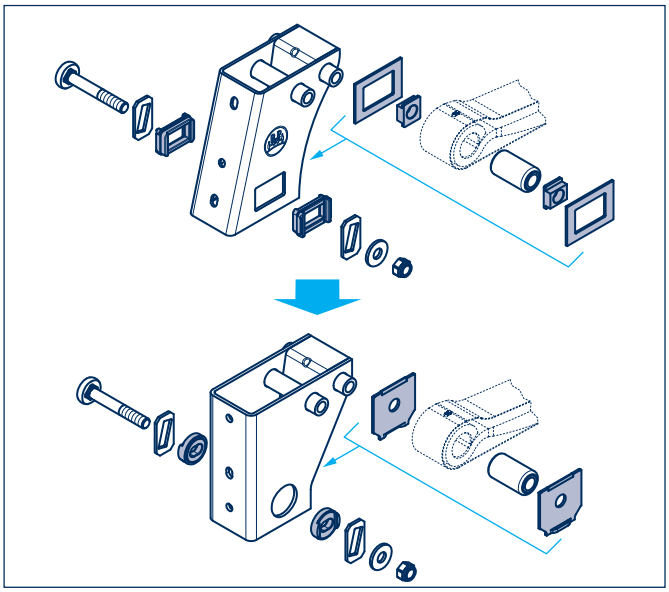

From **week 18/2004** onwards, the functional principle of the loose wearing plates familiar in Airlight II hanger brackets was carried across to the rigid air suspension hanger brackets for 100 mm wide trailing arms.

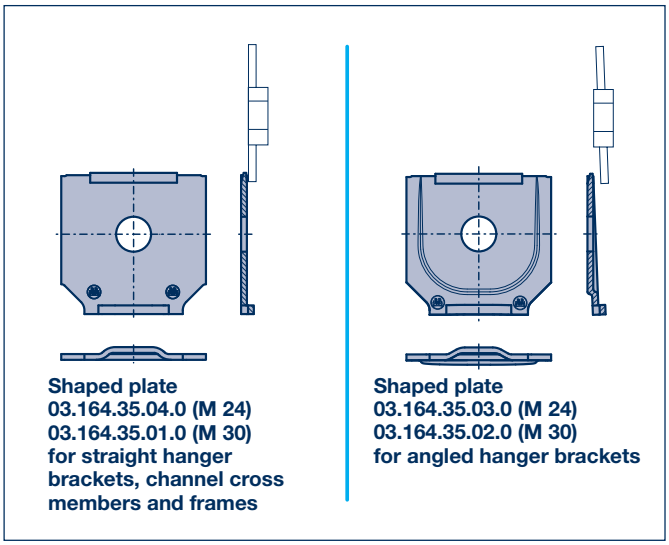

Wearing plates

BPW uses two different versions of wearing plates.

1. A straight shaped plate for straight hanger brackets, channel cross member and frames.

   BPW Code no.: 03.164.35.04.0 - M 24

   03.164.35.01.0 - M 30

2. An offset shaped plate for inclined hanger brackets

   BPW Code no.: 03.164.35.03.0 - M 24

   03.164.35.02.0 - M 30

It is essential to use new spring bolts when the hanger bracket / channel cross member is replaced!

Observe modified spring pivot bolt bearing!

Spare parts for ECO Air (EA) air suspensions see Chap. 11.

Spare parts for ECO Air COMPACT (AC) air suspensions see Chap. 12.

BPW Air suspension hanger brackets 7

General

Determining replacement air suspension hanger brackets

The BPW code number is embossed into the end of the hanger bracket.

If this identification is missing or no longer legible, the particular type of hanger bracket can be determined based on the shape and the dimensions.

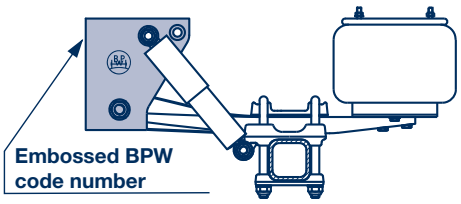

Determining the version

- Hanger bracket / channel cross member / frame
- Steel, aluminium or stainless steel hanger brackets
- Straight box-section hanger bracket / Best-Design hanger bracket / taper mounted hanger bracket
- Spring pivot bolt bearing, rigid or adjustable
- Spring pivot bolt Ø 24 or Ø 30
- Trailing arm 70 or 100 mm wide
- Tall hanger bracket (ST)
- Hanger bracket with shock absorber fastening (screw/bolt)
- Position of shock absorber attachment (D / F)

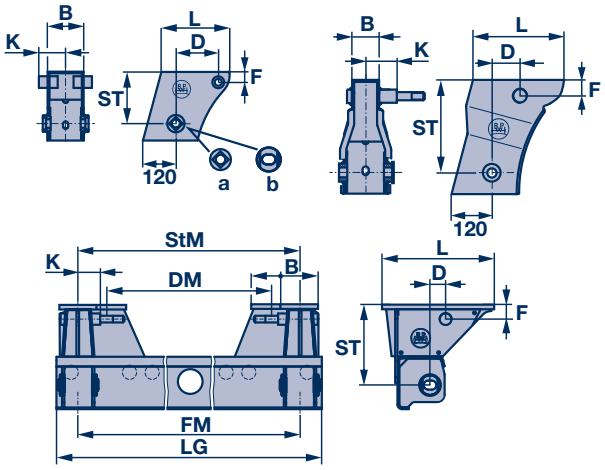

O
SL
AL

7 BPW Air suspension hanger brackets

7.1 Hanger brackets

Hanger bracket height (ST) 100 – 194 mm

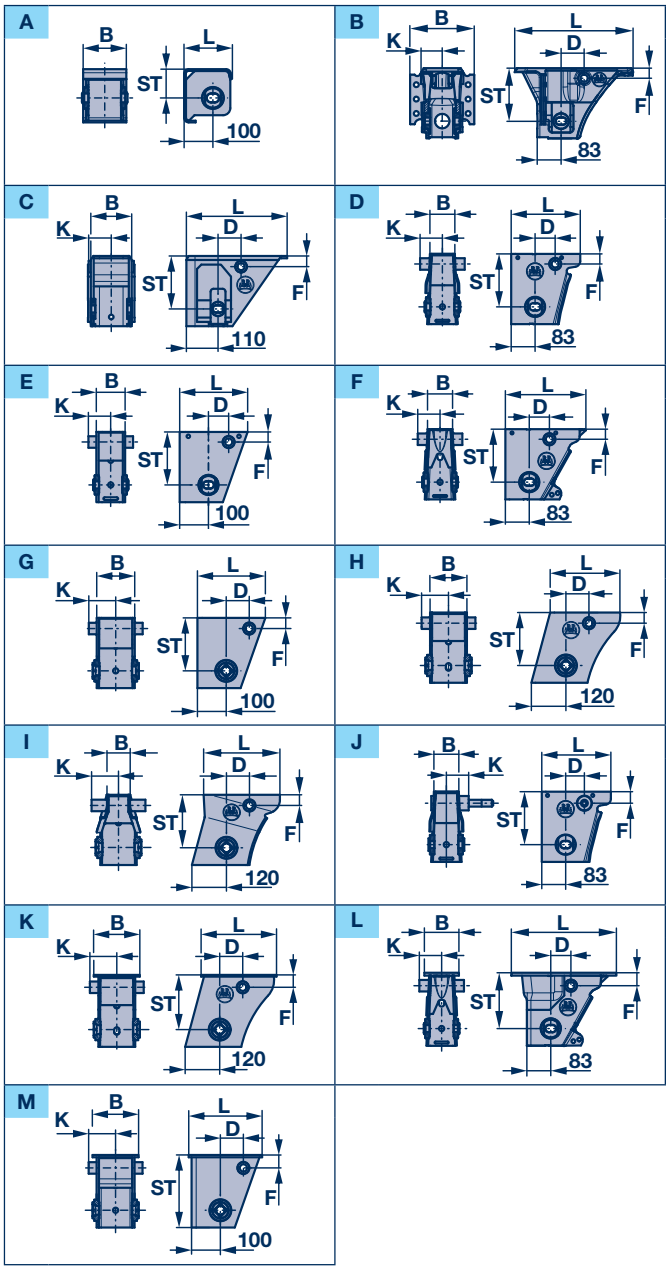

ST Hanger bracket height up to centre spring bolt
FB Trailing arm width
Ø Ø Spring bolt (Ø 24 or Ø 30)

ST	Exec.	Fig.	FB	Ø	B	D	F	K	L
100	D	A	70	24	150	-	-	-	167
			100	30	150	-	-	-	167
184	A	B	70	30	223	80	35	73.5	410
		C	100	30	142	80	37	78.5	350
	E	D	70	24	87	70	35	77.5	240
			70	30	87	70	35	77.5	240
			70	24	91	70	35	77.5	241
			70	30	91	70	35	77.5	241
			70	24	87	65	40	77.5	240
		E	70	24	100	70	35	77.5	236
		F	70	24	87	70	35	77.5	258
		G	100	30	132	80	37	93.5	236
		H	100	30	128	80	37	93.5	243
			100	30	128	130	35	93.5	242
	S	I	100	30	80	80	37	93.5	265
			100	30	80	130	35	93.5	265
			100	30	80	150	35	93.5	265
	X	J	70	24	87	65	40	77.5	240
			70	30	87	65	40	77.5	240
190	D	K	100	30	160	80	43	93.5	262
192			70	24	110	70	43	77.5	260
			70	30	110	70	43	77.5	260
194	K	L	70	24	120	70	35	77.5	365
	D	M	100	30	160	80	37	93.5	255

A Aluminium hanger bracket
D Steel hanger bracket with top plate
E Straight, steel hanger bracket without top plate
K Bolt-on steel hanger bracket with top plate
S Taper mounted steel hanger bracket
X Stainless steel hanger bracket

Alternative versions on request.

BPW Air suspension hanger brackets 7

Hanger brackets 7.1

Hanger bracket height (ST) 100 – 194 mm

Rigid			Adjustable		
Standard	Reinforced		Standard	Reinforced	
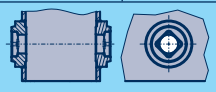		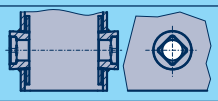	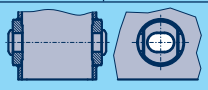		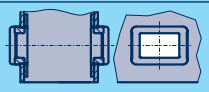
Loose wear plates		Welded on wear plates	Loose wear plates		Square frame
				05.375.69.09.0	
			05.375.68.62.0		
			05.375.44.14.0 *		
			05.375.69.11.0		
			05.375.44.23.0		
			05.375.44.03.0 *		
			05.375.44.30.0		
			05.375.44.16.0 *		
			05.375.44.66.0		
				05.375.44.70.0	
			05.375.44.51.0		
	05.375.68.88.0			05.375.68.52.0	
05.375.40.73.0		⇦ 05.375.40.20.0	05.375.40.55.0		⇦ 05.375.40.22.0
05.375.40.76.0		⇦ 05.375.40.29.0	05.375.40.58.0		
05.375.40.72.0		⇦ 05.375.40.17.0	05.375.40.54.0		⇦ 05.375.40.19.0
05.375.40.75.0		⇦ 05.375.40.27.0	05.375.40.57.0		
					⇦ 05.375.40.18.0
			05.375.44.39.0 L 05.375.44.40.0 R		
			05.375.44.37.0 L * 05.375.44.38.0 R *		
05.375.40.74.0		⇦ 05.375.40.24.0	05.375.40.60.0		
			05.375.44.26.0		
			05.375.44.11.0 *		
			05.375.44.43.0		
	05.375.69.15.0				

⇦No longer available - convert to loose wear plates.

* No longer available – convert to spring bolt Ø 24.

L = Left side

R = Right side

7 BPW Air suspension hanger brackets

7.1 Hanger brackets

Hanger bracket height (ST) 268 mm

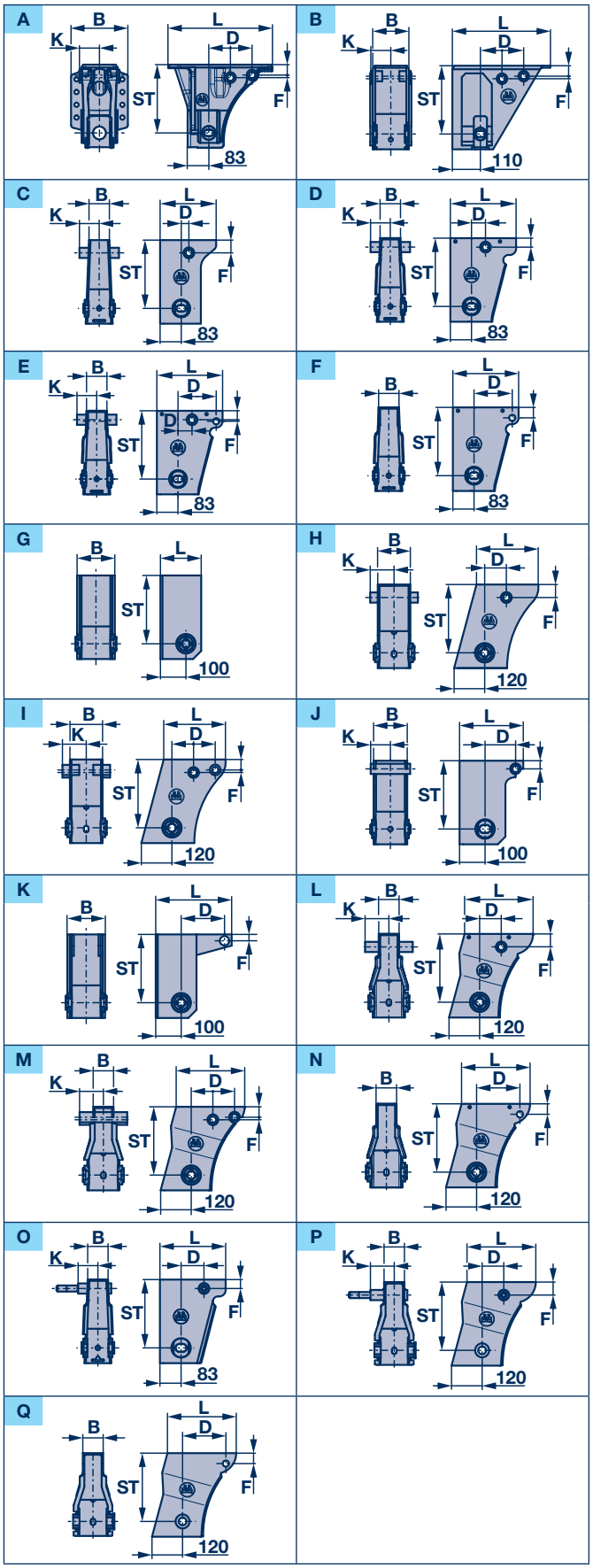

ST Hanger bracket height up to centre spring bolt
FB Trailing arm width
Ø Ø Spring bolt (Ø 24 or Ø 30)

ST	Exec.	Fig.	FB	Ø	B	D	F	K
268	A	A	70	30	223	85 / 170	51 / 41	78.5
		B	70	24	142	85 / 170	51 / 41	78.5
	E	C	70	24	80	30	50	77.5
				30	80	30	50	77.5
		D	70	24	80	55	35	77.5
				30	80	55	35	77.5
				24	80	90	35	77.5
				30	80	90	35	77.5
				24	80	83	40	77.5
				24	84	90	35	77.5
				24	84	150	41	77.5
		E	70	24	80	55 / 150	41 / 35	77.5
		F	70	24	80	150	41	-
				30	80	150	41	-
		J	70	24	80	55	32	77.5
		G	100	30	148	-	-	-
		H	100	30	128	85	51	93.5
		I	100	30	125	85 / 170	51 / 41	93.5
		J	100	30	132	120	32	77.5
		K	100	30	148	170	25	-
		H	100	30	128	170	41	93.5
		I	100	30	125	85 / 170	51 / 41	93.5
	S	L	100	30	80	85	51	93.5
		M	100	30	80	85 / 170	51 / 41	93.5
		N	100	30	80	170	41	-
		L	100	30	80	170	41	93.5
								72
	X	O	70	24	80	83	40	77.5
				30	80	83	40	77.5
		P	100	30	80	85	51	93.5
				30	80	170	41	93.5
		Q	100	30	80	170	41	-

A Aluminium hanger bracket
E Straight, steel hanger bracket without top plate
S Taper mounted steel hanger bracket
X Stainless steel hanger bracket

Alternative versions on request.

BPW Air suspension hanger brackets 7

Hanger brackets 7.1

Hanger bracket height (ST) 268 mm

	Rigid				Adjustable		
	Standard	Reinforced	Standard	Reinforced	Standard	Reinforced	Standard
	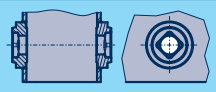		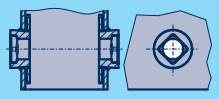		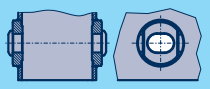		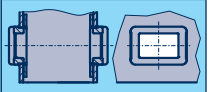
L	Loose wear plates		Welded on wear plates		Loose wear plates		Square frame
410					05.375.44.04.0 *		
268					05.375.69.12.0		
220					05.375.44.29.0		
220					05.375.44.15.0 *		
258					05.375.44.21.0 [1]		
258					05.375.44.01.0 *		
258					05.375.44.22.0		
258					05.375.44.02.0 *		
258					05.375.44.67.0		
258						05.375.44.32.0	
259						05.375.44.31.0	
258					05.375.44.60.0		
258					05.375.44.24.0 [2]		
258					05.375.44.05.0 *		
250						05.375.44.63.0	
160		05.375.68.85.0		⇦ 05.375.67.88.0			
242	05.375.40.65.0		⇦ 05.375.40.03.0		05.375.40.56.0		⇦ 05.375.40.26.0
305			⇦ 05.375.67.05.0			05.375.68.63.0	
242	05.375.40.63.0		⇦ 05.375.40.01.0		05.375.40.49.0		⇦ 05.375.40.06.0
305			⇦ 05.375.67.03.0				⇦ 05.375.63.44.0
250						05.375.69.08.0	
298		05.375.68.84.0		⇦ 05.375.67.86.0			
242	05.375.40.66.0		⇦ 05.375.40.05.0				
305		05.375.68.89.0		⇦ 05.375.68.23.0		05.375.68.51.0	
270					05.375.40.51.0		⇦ 05.375.40.09.0
319		05.375.68.98.0	⇦ 05.375.67.13.0	⇦ 05.375.68.43.0			⇦ 05.375.63.79.0
270	05.375.40.70.0		⇦ 05.375.40.14.0		05.375.40.53.0		⇦ 05.375.40.13.0
319			⇦ 05.375.68.07.0				⇦ 05.375.68.08.0
270	05.375.40.69.0		⇦ 05.375.40.11.0		05.375.40.52.0		⇦ 05.375.40.12.0
319		05.375.68.99.0	⇦ 05.375.67.07.0	⇦ 05.375.68.44.0			⇦ 05.375.63.53.0
270	05.375.40.67.0		⇦ 05.375.40.08.0		05.375.40.48.0		⇦ 05.375.40.04.0
319		05.375.68.97.0	⇦ 05.375.67.12.0	⇦ 05.375.68.42.0		05.375.69.01.0	⇦ 05.375.63.77.0
270					05.375.40.61.0		⇦ 05.375.63.80.0
258					05.375.44.27.0 L 05.375.44.28.0 R		
258					05.375.44.12.0 R * 05.375.44.13.0 L *		
269			05.375.40.38.0 R 05.375.40.39.0 L				
269			05.375.40.40.0 R 05.375.40.41.0 L				
269			05.375.40.42.0 R 05.375.40.47.0 L				

⇦ No longer available - convert to loose wear plates.

* No longer available – convert to spring bolt Ø 24.

[1] replaced by 05.375.44.60.0 after remaining stocks have been used up

[2] replaced by 05.375.44.60.0

L = Left side

R = Right side

7 BPW Air suspension hanger brackets

7.1 Hanger brackets

Hanger bracket height (ST) 274 – 310 mm

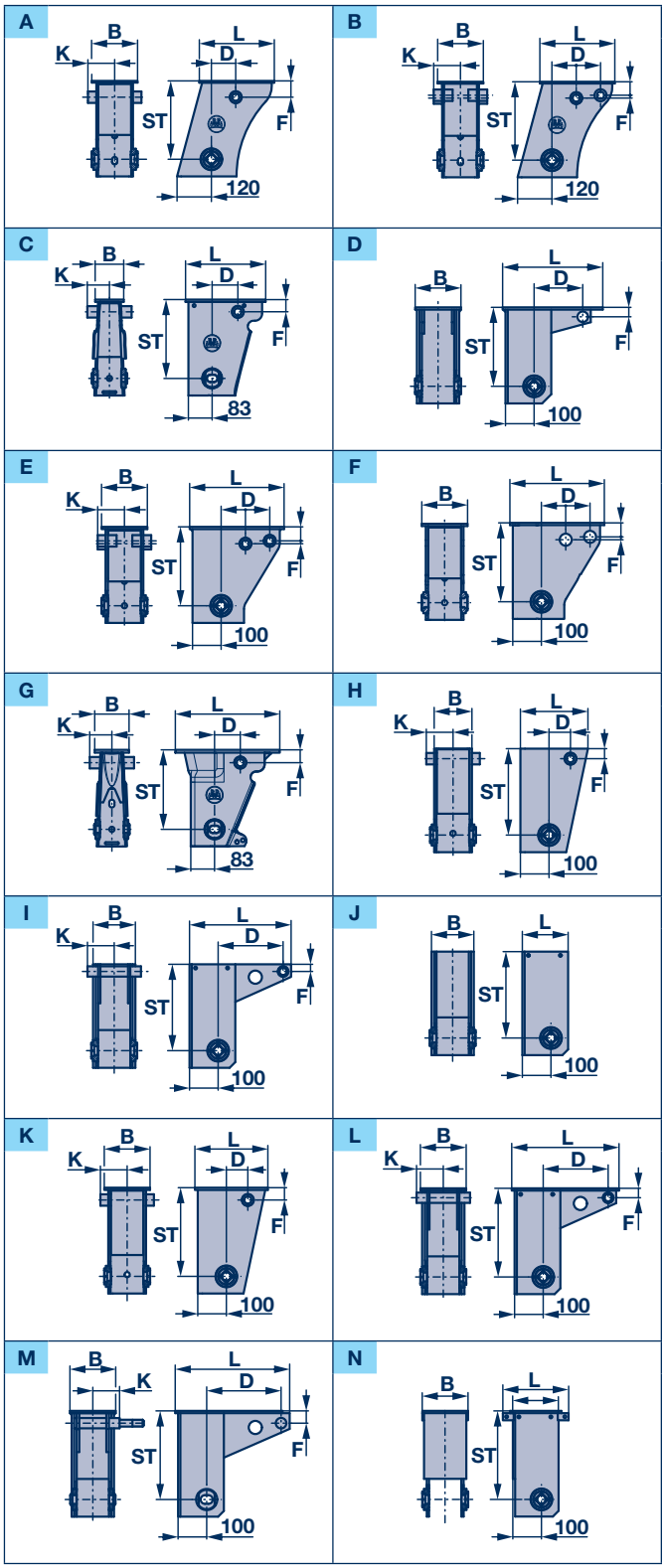

ST Hanger bracket height up to centre spring bolt
FB Trailing arm width
Ø Ø Spring bolt (Ø 24 or Ø 30)

ST	Exec.	Fig.	FB	Ø	B	D	F	K
274	D	A	100	30	160	85	57	93.5
		B	100	30	160	85 / 170	57 / 47	93.5
276	D	C	70	24	100	90	35	77.5
		D	100	30	160	170	33	-
		E	100	30	160	85 / 170	57 / 47	93.5
		F	100	30	160	85 / 170	59 / 49	-
278	K	G	70	24	120	55	35	77.5
				24	120	90	35	77.5
302	E	H	100	30	132	75	35	93.5
				30	148	75	35	93.5
		I	100	30	148	227	25	93.5
		J	100	30	148	-	-	-
310	D	K	100	30	160	75	43	93.5
		L	100	30	160	227	33	93.5
	E	I	100	30	160	260	33	93.5
	D	M	100	30	160	260	43	93.5
		L	100	30	160	260	43	93.5
		J	100	30	160	-	-	-
		N	100	30	160	-	-	-

D Steel hanger bracket with top plate
E Straight, steel hanger bracket without top plate
K Bolt-on steel hanger bracket with top plate
Alternative versions on request.

BPW Air suspension hanger brackets 7

Hanger brackets 7.1

Hanger bracket height (ST) 274 – 310 mm

	Rigid				Adjustable		
	Standard	Reinforced	Standard	Reinforced	Standard	Reinforced	Standard
	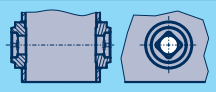		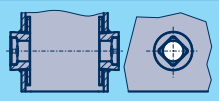		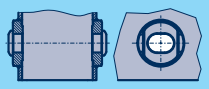		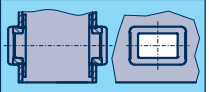
L	Loose wear plates		Welded on wear plates		Loose wear plates		Square frame
262	05.375.40.71.0		⇦ 05.375.40.15.0				
330			⇦ 05.375.67.06.0				
262	05.375.40.64.0		⇦ 05.375.40.02.0		05.375.40.50.0		⇦ 05.375.40.07.0
330			⇦ 05.375.67.04.0				⇦ 05.375.63.91.0
280					05.375.44.25.0		
350		05.375.68.78.0		⇦ 05.375.67.27.0			
330		05.375.68.92.0		⇦ 05.375.68.34.0			
330		05.375.69.16.0					
365					05.375.44.42.0		
365					05.375.44.41.0		
236		05.375.68.91.0		⇦ 05.375.68.29.0		05.375.68.53.0	⇦ 05.375.68.30.0
236			⇦ 05.375.67.38.0				
355		05.375.68.67.0				05.375.68.76.0	
160	05.375.68.81.0						
255		05.375.68.93.0		⇦ 05.375.68.35.0			
375	05.375.68.66.0						
375	05.375.68.68.0						
400					05.375.68.49.0 L 05.375.68.50.0 R		
400	05.375.68.65.0				05.375.68.77.0		
180	05.375.68.80.0		⇦ 05.375.68.03.0	05.375.67.48.0.0			
180 (230)	05.375.68.87.0						

⇦No longer available - convert to loose wear plates.

L = Left side

R = Right side

7 BPW Air suspension hanger brackets

7.1 Hanger brackets

Hanger bracket height (ST) 350 – 430 mm

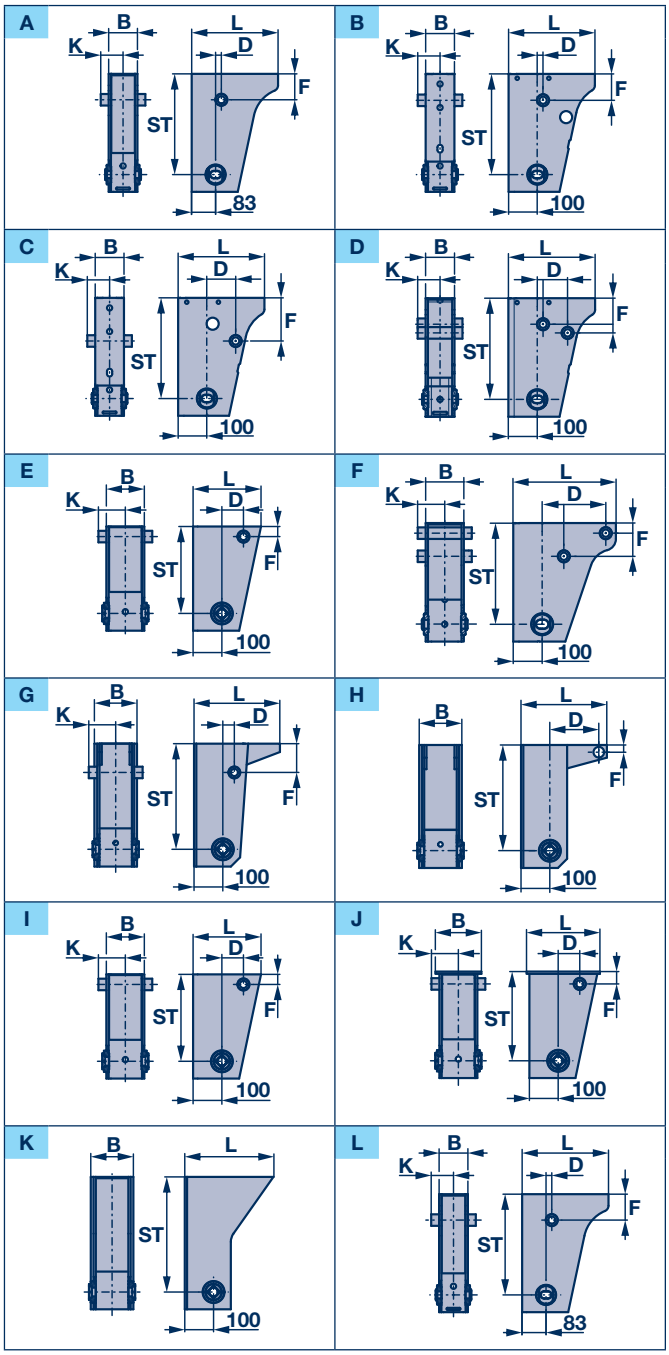

ST Hanger bracket height up to centre spring bolt
FB Trailing arm width
Ø Ø Spring bolt (Ø 24 or Ø 30)

ST	Exec.	Fig.	FB	Ø	B	D	F	K
350	E	A	70	24	100	20	90	77.5
				30	100	20	90	77.5
		B	70	24	100	20	90	77.5
		A	70	24	100	100	150	77.5
				30	100	100	150	77.5
		C	70	24	100	100	150	77.5
		D	70	24	100	20 / 105	90 / 120	77.5
		E	100	30	132	75	115	93.5
		F	100	30	132	75 / 220	115 / 35	93.8
367	E	G	100	30	148	40	100	-
		H	100	30	148	170	25	-
370	E	I	100	30	132	40	100	93.5
				30	132	140	90	93.5
378	D	J	100	30	160	40	108	93.5
				30	160	140	98	93.5
400	E	K	100	30	148	-	-	-
408	D	J	100	30	160	130	58	93.5
430	D	J	100	30	160	140	110	93.5
	E	I	100	30	132	140	110	93.5
		L	70	24	100	140	110	77.5

D Steel hanger bracket with top plate
E Straight, steel hanger bracket without top plate
Alternative versions on request.

BPW Air suspension hanger brackets 7

Hanger brackets 7.1

Hanger bracket height (ST) 350 – 430 mm

	Rigid				Adjustable		
	Standard	Reinforced	Standard	Reinforced	Standard	Reinforced	Standard
	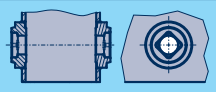		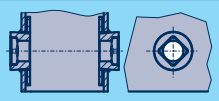		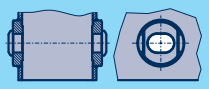		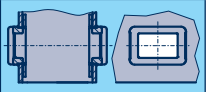
L	Loose wear plates		Welded on wear plates		Loose wear plates		Square frame
300						05.375.44.34.0 [1]	
300						05.375.44.20.0 *	
300						05.375.44.68.0	
300						05.375.44.33.0 [2]	
300						05.375.44.19.0 *	
300						05.375.44.69.0	
300						05.375.44.64.0	
290		05.375.69.18.0					
355		05.375.69.13.0				05.375.69.17.0	
298	05.375.69.02.0		⇦ 05.375.67.99.0		05.375.69.03.0		
298	05.375.68.86.0						
328		05.375.68.94.0				05.375.68.55.0	
328		05.375.68.90.0		⇦ 05.375.68.24.0		05.375.68.54.0	⇦ 05.375.68.31.0
350		05.375.68.95.0		⇦ 05.375.68.37.0			
350		05.375.68.96.0		⇦ 05.375.68.39.0			
308	05.375.68.79.0						
350	05.375.68.74.0						
350			05.375.68.40.0			05.375.68.56.0	
320		05.375.69.14.0					
355						05.375.44.65.0	

⇦ No longer available - convert to loose wear plates.

* No longer available – convert to spring bolt Ø 24.

[1] replaced by 05.375.44.68.0 after remaining stocks have been used up

[2] replaced by 05.375.44.69.0 after remaining stocks have been used up

L = Left side

R = Right side

7 BPW Air suspension hanger brackets

7.2 Spare parts for hanger brackets, channel cross members and frames

O
SL
AL

Spare parts for hanger brackets / channel cross members and frames

Torsion protection with slotted bush, round wearing plate	Torsion protection with slotted bush, square wearing plate, through bush	Torsion protection with square socket, through bush

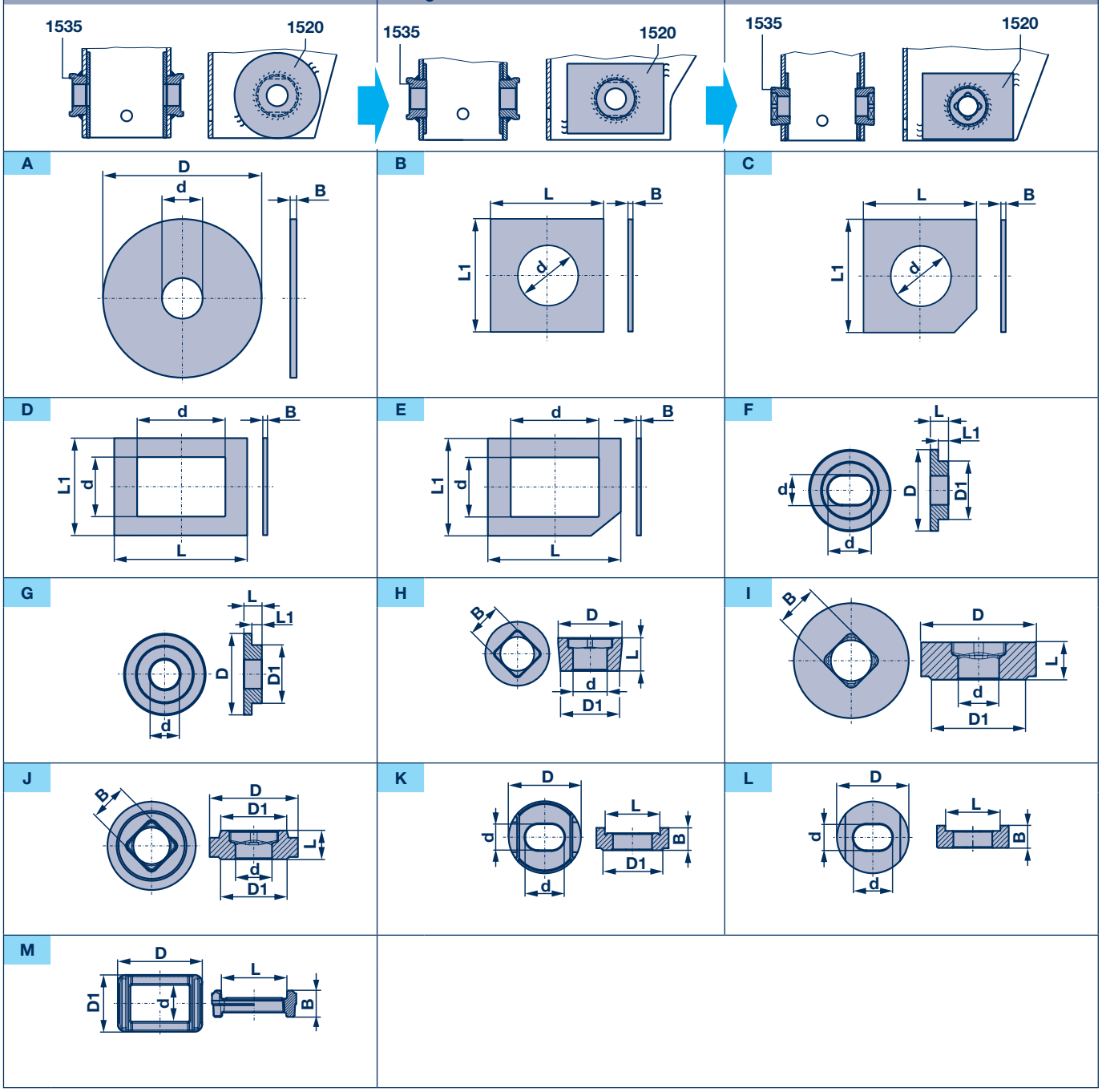

[1] Changing the weld-in bushes see Chap. 7.2.1.

Spare parts for ECO Air (EA) air suspensions see Chap. 11.

Spare parts for ECO Air COMPACT (AC) air suspensions see Chap. 12.

BPW Air suspension hanger brackets 7

Spare parts for hanger brackets, channel cross members and frames 7.2

Spare parts for hanger brackets, channel cross member and frames

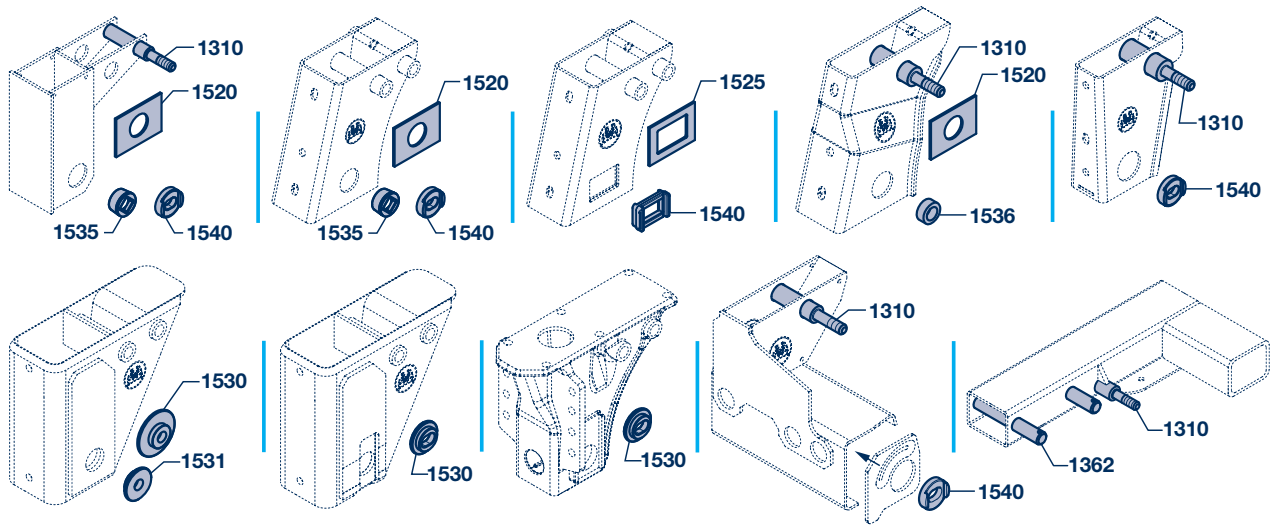

Item	Designation	Fig.	Dimension	L	L1	D	D1	d	B	BPW code no.:
	Chock absorber fastening									
1310	Threaded bolt		see upper shock absorber attachment Chap. 5.3							
	Catch strap attachment									
1363	Threaded bolt		see catch strap attachment Chap. 6.2							
	Round wearing plate									
1520	Washer	A	Ø 30 / 121 x 5	-	-	Ø 121	-	Ø 30	4.75	03.320.36.08.0
	Square wearing plate									
1520	Plate	B	Ø 56 / ☐ 105 x 4.5	105	105	-	-	Ø 56	4.5	03.281.15.03.0
		C	Ø 56 / ☐ 105 x 4.5							03.281.24.17.0
		B	Ø 56 / ☐ 101/140 x 4.5	101	140					03.281.35.16.0
1525	Plate	D	☐ 62/92 / ☐ 101/140 x 4.5	140	101	-	-	☐ 62/92	4.5	03.281.25.04.0
		E	☐ 62/92 / ☐ 101/130 x 4.5	130						03.281.25.06.0
			☐ 62/92 / ☐ 101/140 x 4.5	140						03.285.25.34.0
1530	Washer	F	Ø 24 / 36.6 / 50/70 x 15	15.6	9.8	Ø 70	Ø 50	Ø 24/36	-	03.320.14.09.0
	Bush		Ø 30 / 42.6 / 55/90 x 20	20	14	Ø 90	Ø 55	Ø 30/42		03.113.01.43.0
	Washer	G	Ø 24 / 50 / 110 x 20	19.5	9.8	Ø 110	Ø 50	Ø 24		03.320.16.09.0
			Ø 30 / 50 / 110 x 18	18.5		Ø 100		Ø 30		03.320.16.03.0
			Ø 30 / 50 / 110 x 20	19.5						03.320.16.04.0
1531	Washer		Ø 24 / 50 / 70 x 15	15.5		Ø 70		Ø 24		03.320.14.08.0
			Ø 30 / 50 / 70 x 16	15.5				Ø 30		03.320.14.07.0
			Ø 30 / 50 / 70 x 18	18.5						03.320.15.10.0
1535	Bush [1] (weld-in bush)	A		Torsion protection with slotted bush. No longer available. Conversion to bush with square torsion protection.						03.113.02.06.0 03.113.02.09.0
		H	Ø 30 / 51 / 56 x 29	29		Ø 56	Ø 51	Ø 30.5	☐ 30	03.113.01.34.0
		I	Ø 24 / 55 / 67.6 x 22	22		Ø 68	Ø 55	Ø 24.1	☐ 24	03.113.00.56.0
		J	Ø 30 / 55 / 73.6 x 24	24		Ø 74	Ø 55	Ø 30.5	☐ 30	03.113.01.46.0
1540	Bush [1] (weld-in bush)	K	Ø 24 / 36 / 67 x 21	52		Ø 62		Ø 24/36	21	03.113.03.10.0
		L	Ø 24 / 36 / 67 x 21			Ø 68				03.113.03.09.0 V2A
		K	Ø 30 / 42 / 74 x 23	58		Ø 74		Ø 30/42	23	03.113.23.01.0
		L	Ø 30 / 42 / 74 x 23							03.113.01.45.0 V2A
	Shaped part	M	92 x 62 x 29	72		92		70	29	03.001.14.86.0

7 BPW Air suspension hanger brackets

7.2 Spare parts for hanger brackets, channel cross members and frames

7.2.1 Changing the weld-in bushes (spring bolt assembly) in BPW hanger brackets

O

SL

AL

Changing the weld-in bushes (spring bolt assembly) in BPW air suspension hanger brackets for 100 mm wide trailing arms and loose wear plates

Perform the following work if the mounting bushes are worn out:

1. Remove the worn-out bushes from the side plates
2. Insert new bushes and use spacer sleeve* (112.5) or trailing arm bush (102.5 + 0.5) plus mounted wear plates to preload, align centrally and with adjustable hanger brackets horizontally and tack-weld

without mounted distance sleeves*

*** not a BPW tool**

with mounted trailing arm bush and wear plates

Rigid hanger bracket

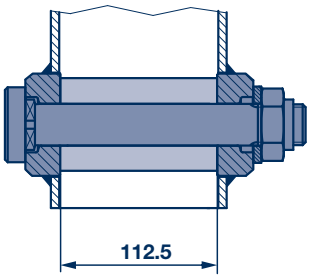

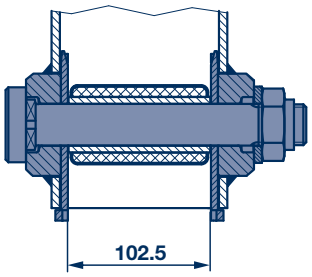

Adjustable hanger bracket

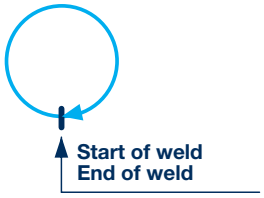

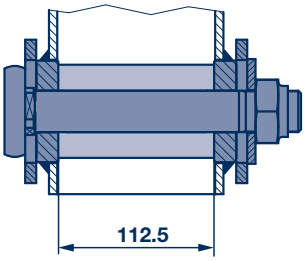

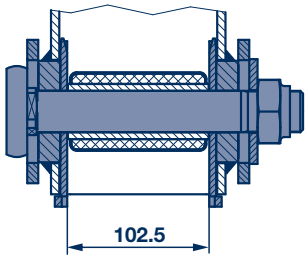

3. Weld the bushes
4. When mounting the trailing arms:
   - Lightly grease the stud thread and nut contact surface
   - Mount wear plates
   - Tighten lock nut M 30 to M = 900 Nm (840 – 990 Nm)

☞ **Important for all welding work!**

The trailing arms, spring U-bolts, air bags, shock absorbers and plastic lines must be protected against flying sparks and weld spatter during all welding work.

Under no circumstances must the earth terminal be attached to the trailing arm or hub.

Welding method:

◎ Inert gas welding
Weld wire quality G 4 Si 1 (DIN EN 440)

◎ Manual arc welding
Rod electrodes E 46 2 (DIN EN 499)

Mechanical quality values must correspond to the basic material S 420 or S 355 J 2

Seam thickness a 4 ◺ to a 5 ◺(DIN EN ISO 25817)

Avoid end craters and undercuts!

BPW Air suspension hanger brackets 7

Spare parts for hanger brackets, channel cross members and frames 7.2

Changing the weld-in bushes (spring bolt assembly) in BPW hanger brackets 7.2.1

Changing the weld-in bushes (spring bolt assembly) in BPW air suspension hanger brackets for 70 mm wide trailing arms and loose wear plates

Perform the following work if the mounting bushes are worn out:

1. Remove the worn-out bushes from the side plates
2. Insert new bushes and use spacer sleeve* (82.5) or trailing arm bush (72 + 0.5) plus mounted wear plates to preload, align centrally and with adjustable hanger brackets horizontally and tack-weld

AL

without mounted distance sleeves*

*** not a BPW tool**

with mounted trailing arm bush and wear plates

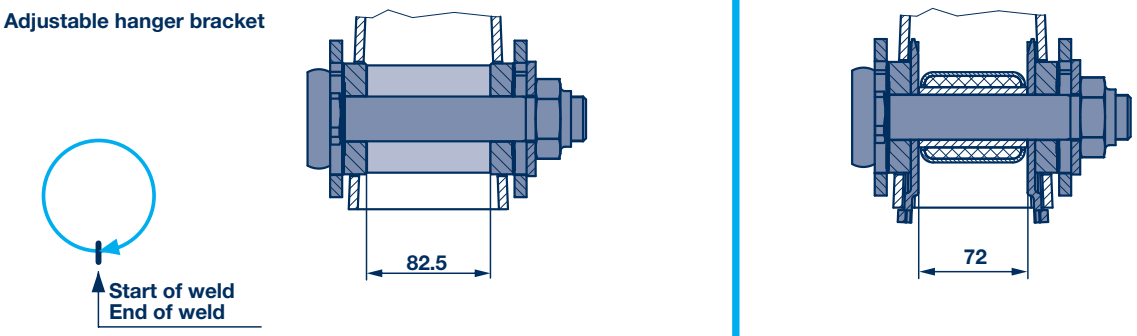

3. Weld the bushes
4. When mounting the trailing arms:
   - Lightly grease the stud thread and nut contact surface
   - Mount wear plates
   - Lock nut Tighten M 24 to M = 650 Nm (605 - 715 Nm)
     Tighten M 30 to M = 900 Nm (840 - 990 Nm)

☞ **Important for all welding work!**

The trailing arms, spring U-bolts, air bags, shock absorbers and plastic lines must be protected against flying sparks and weld spatter during all welding work.

Under no circumstances must the earth terminal be attached to the trailing arm or hub.

Welding method:

◎ Inert gas welding
Weld wire quality G 4 Si 1 (DIN EN 440)

◎ Manual arc welding
Rod electrodes E 46 2 (DIN EN 499)

Mechanical quality values must correspond to the basic material S 420 or S 355 J 2

Seam thickness a 4 ◺ to a 5 ◺(DIN EN ISO 25817)

Avoid end craters and undercuts!

8 U-stabilizers

U-stabilizers, attachments

O
SL
AL

U-stabilizers, attachments

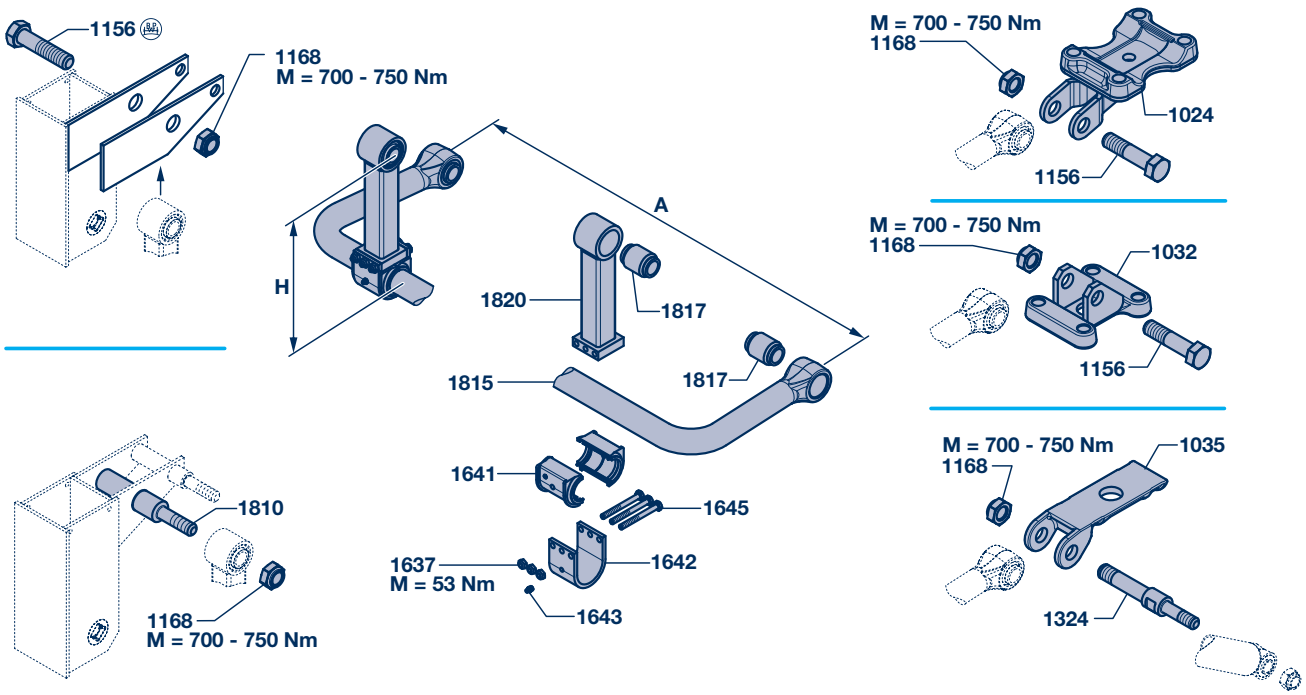

Item	Designation	Dimension	BPW code no.:	
			Lower stabilizer attachment between plates	Lower stabilizer attachment at threaded bolt
1024	Spring pad		see Chap. 2.2	-
1032 1035	Spring plate		see Chap. 2.3	see Chap. 2.3
1156	Hexagon screw	M 30 x 130 - 8.8	03.340.15.26.0	-
1168	Lock nut	M 30 / SW 46	03.260.15.01.0	03.260.15.01.0
1324	Threaded bolt	M 24 / M 30 / L = 260	-	03.177.24.22.0
			Upper stabilizer attachment between plates	Upper stabilizer attachment at threaded bolt
1156	Hexagon screw	M 30 x 130 - 8.8	03.340.15.26.0	-
1168	Lock nut	M 30 / SW 46	03.260.15.01.0	03.260.15.01.0
1810	Threaded bolt	M 30 / Ø 45 x 144	-	03.177.35.08.0
1637	Lock nut	VM 10 / 980	02.5220.10.82	
1641	Bush	Ø 50 / 70 x 94	03.113.98.06.0	
1642	Shaped plate		03.160.56.01.0	
1643	Grease nipple	AM 10 x 1 / 71412	02.6802.03.50	
1645	Hexagon screw	M 10 x 110 - 10.9	02.5021.54.11	
				Bush (item 1817)
1815	U-bolt incl. item 1817	A = 900	05.114.98.18.0	05.113.96.06.0 Ø 30 / 52.6 x 68
		A = 980	05.114.98.19.0	
		A = 1100	05.114.98.20.0	
		A = 1200	05.114.98.21.0	
		A = 1300	05.114.98.22.0	
1820	Support incl. item 1817	H = 120	05.189.15.73.0	05.113.96.05.0 Ø 30 / 60 x 68
		H = 180	05.189.03.97.0	
		H = 275	05.189.02.16.0	
		H = 395	05.189.03.99.0	

Air reservoirs 9

Air reservoirs

Air reservoir, standard

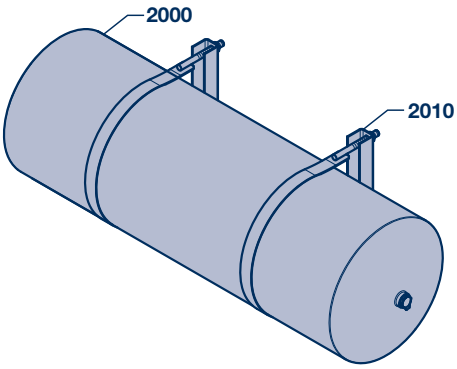

Item	Designation	Remark	Dimension			BPW code no.:	
Air reservoir, standard							
			Capacity Litre	Ø	L	Air reservoir	Attachment Item 2010
2000	Air reservoirs		10	206	355	02.2004.09.00	05.189.15.21.0
			40	276	745	02.2004.01.00	02.0328.10.00
			60	310	850	02.2004.05.00	05.189.14.68.0
		Aluminium	60	310	850	02.2004.11.00	05.189.14.68.0
			60	396	565	02.2004.02.00	02.0326.13.00
		Aluminium	60	396	565	02.2004.10.00	02.0326.13.00

10 BPW Axle lift devices

General

O

SL

AL

BPW Axle lift devices

As an option, multi-axle vehicles can be equipped with an axle lift to reduce the wear on the tyres when driving unladen or with a light cargo. BPW offers axle lifts for positioning in the middle or at the sides of the axle.

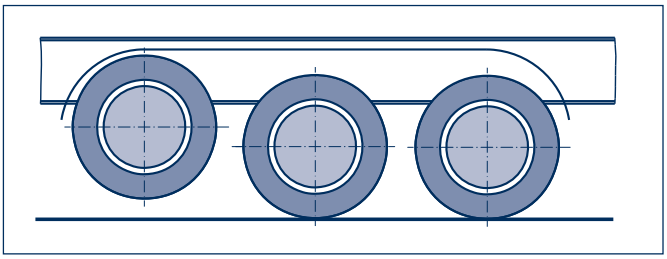

Side mounted axle lift

A sidewise mounted lift is recommended for lifting the first axle and in vehicles with limited ground clearance, high axle loads or long suspension travel.

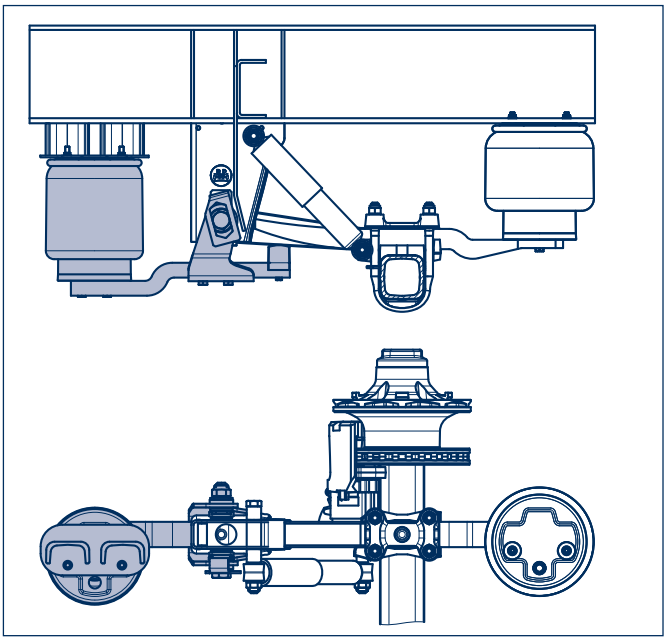

Central mounted axle lift

The lifting device can be arranged in the centre of the axle for lifting the central (rear) suspension axle or if space is limited.

This axle lift device is attached to the frame by cross-members in the middle of the vehicle.

The lift bag forces must also be absorbed by a cross-member.

Spare parts for ECO Air (EA) air suspensions see Chap. 11.

Spare parts for ECO Air COMPACT (AC) air suspensions see Chap. 12.

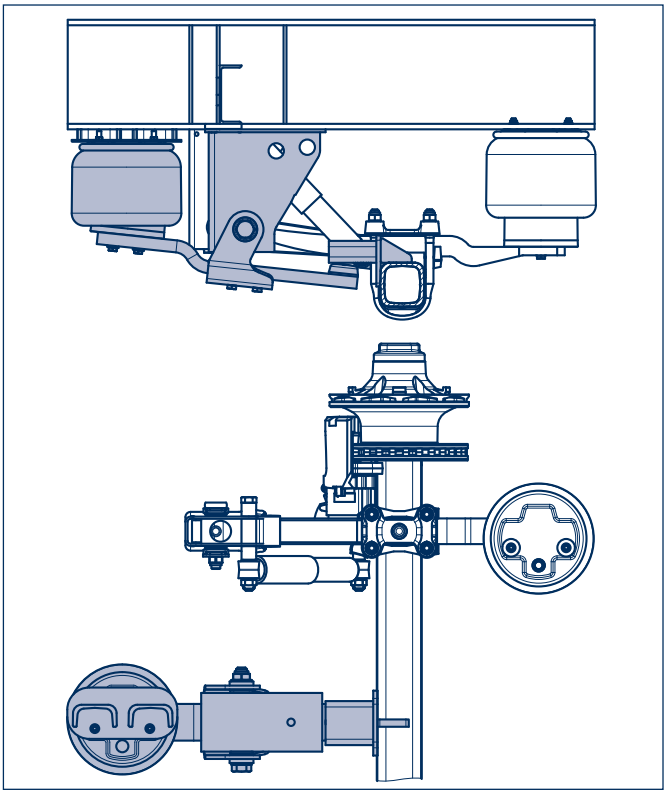

BPW Axle lift devices 10

General

Central axle lift

Both the central axle lift device using a lifting bag and the BPW central lift with bellows fitted in the middle of the vehicle can lift one or more suspension axles and are integrated within the space of the axle unit.

Their compact design means they are preferred for use in vehicles with limited ground clearance and small tyres (e.g. pallet box trailers with single tyres).

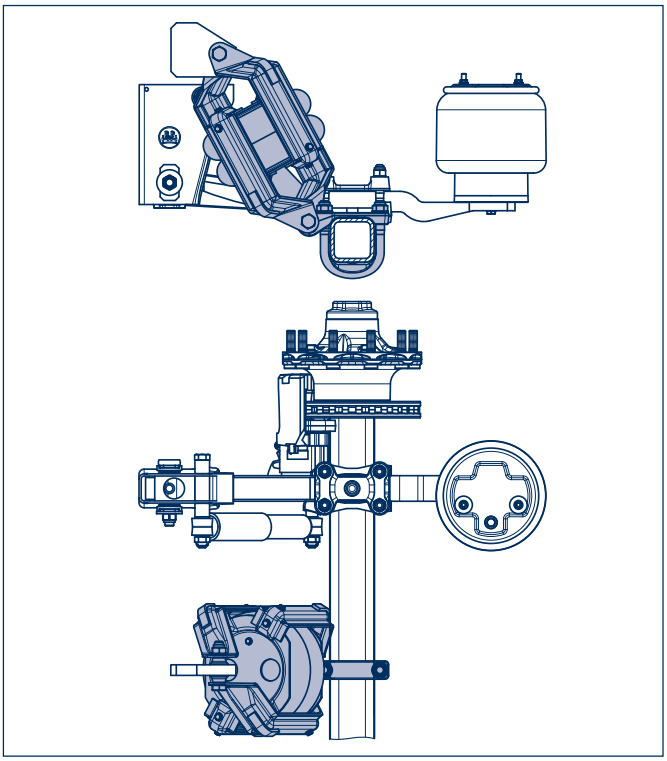

Two-sided lift

The two-sided lift (for air-sprung axles up to 10 tonnes) does not need any space in front of the air suspension hanger brackets or in the middle of the vehicle.

It can be retrofitted at any time to offer the convincing benefits of low weight and good ground clearance.

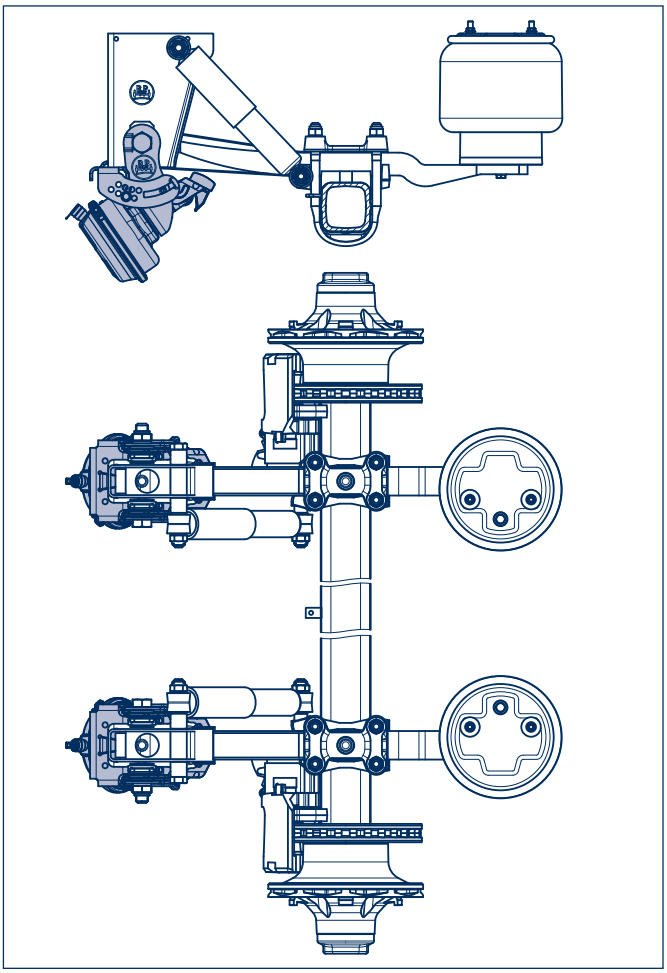

Spare parts for ECO Air (EA) air suspensions see Chap. 11.

Spare parts for ECO Air COMPACT (AC) air suspensions see Chap. 12.

10 BPW Axle lift devices

10.1 Sidewise mounted axle lifts

10.1.1 Trailing arms 70 mm wide

AL

Sidewise mounted axle lifts, trailing arms 70 mm wide

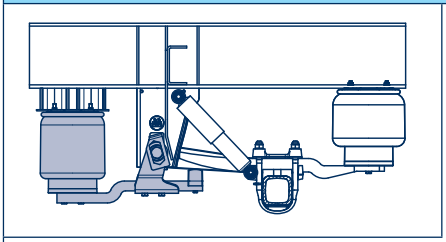

Normal box-section hanger bracket

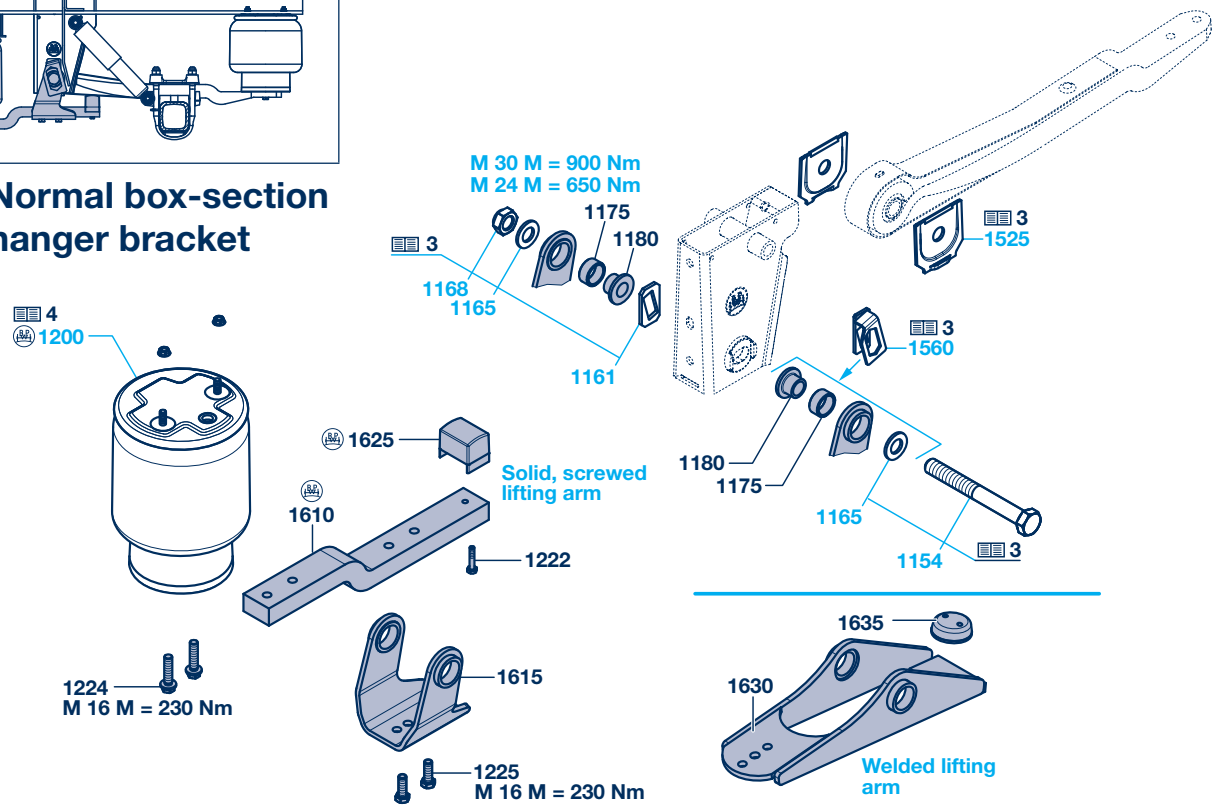

Channel cross member

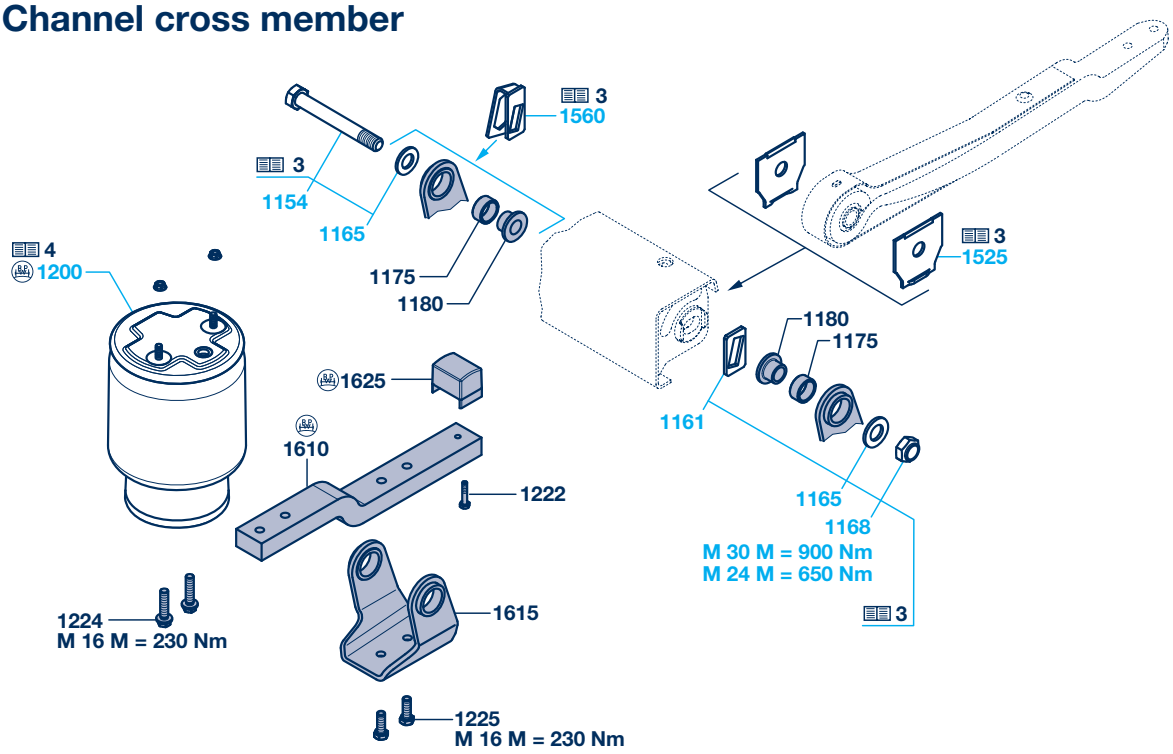

BPW Axle lift devices 10

Sidewise mounted axle lifts 10.1

Trailing arms 70 mm wide 10.1.1

Sidewise mounted axle lifts, trailing arms 70 mm wide					
Item	**Designation**	**Remark**	**BPW code no.:**	**Dimension**	
1154 / 1156	Screw (spring bolt)		see Chap. 3		
1161	Plate (adjusting plate)				
1165	Washer				
1168	Lock nut				
			Spring bolt M 24		**Spring bolt M 30**
1175	Bush		03.113.94.10.0	Ø 41 / 50 x 23	03.113.94.10.0 Ø 41 / 50 x 23
1180	Bush (graduated bush)		03.113.00.54.0	Ø 24 / 40 / 62 x 33.5	03.113.01.47.0 Ø 30 / 40 / 62 x 31
1200	Air bag		see Chap. 4		
1222	Locking screw		02.5025.56.11	M 10 x 50	
1224	Locking screw		02.5070.95.00	M 16 x 65	
1225	Locking screw		02.5026.35.12	M 16 x 45	
1525	Shaped plate		see Chap. 3		
1560	Adjusting plate with welded on torsion protection				
			Solid, screwed lifting arm		
1610	Lifting arm		03.195.01.01.0	L = 605	
1615	Support		05.189.15.15.0	B = 146	
1222	Locking screw		02.5025.56.11	M 10 x 50	
1625	Bumper		02.3506.07.00	80 x 61 x 70	
Fig. for spare parts see Chap. 3.					
			Welded lifting arm		
1630	Support		05.189.16.47.0	L = 639.5, H = 77	
			05.189.16.48.0	L = 639.5, H = 137	
Alternative versions on request.					
1224	Locking screw		02.5071.61.16	M 16 x 61	
1635	Bumper		02.3506.02.00	Ø 80 / M 12	

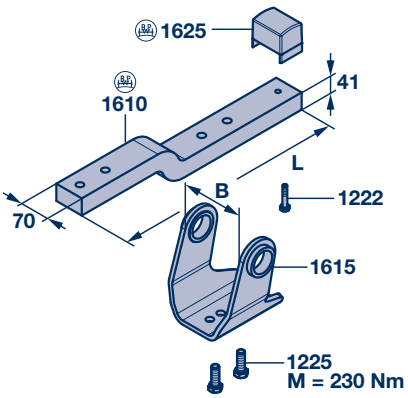

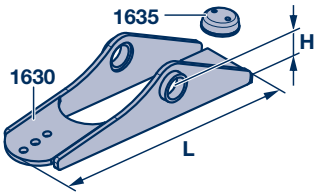

Fig. for spare parts see Chap. 3.

10 BPW Axle lift devices

10.1 Sidewise mounted axle lifts

10.1.2 Trailing arms 100 mm wide

O
SL
AL

Sidewise mounted axle lifts, trailing arms 100 mm wide

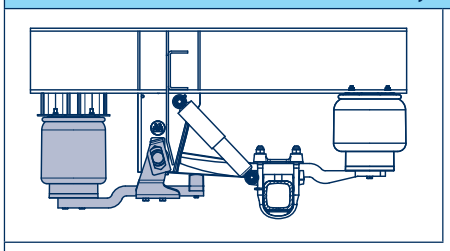

Rigid steel hanger bracket

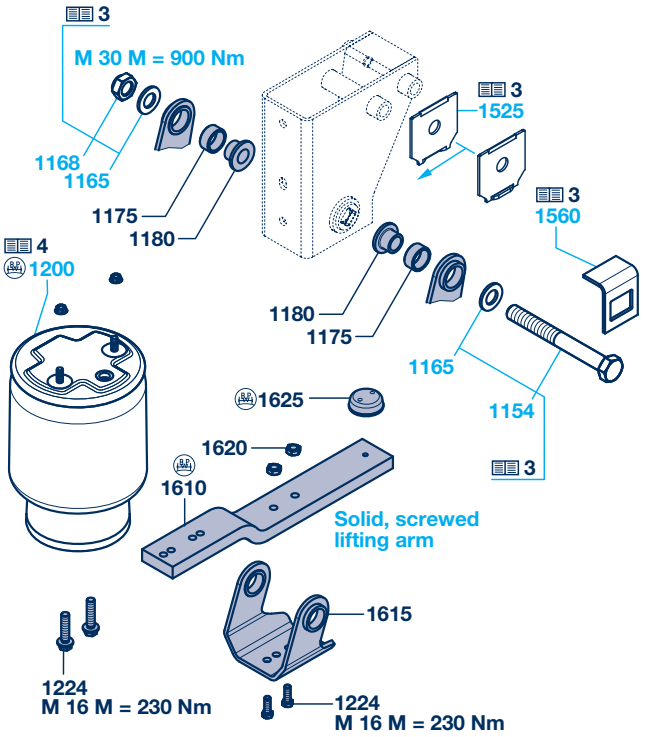

Rigid aluminium hanger bracket

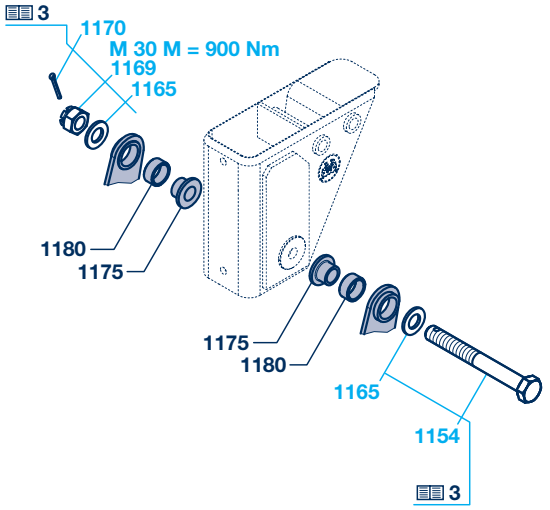

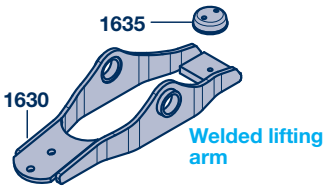

Adjustable steel hanger bracket

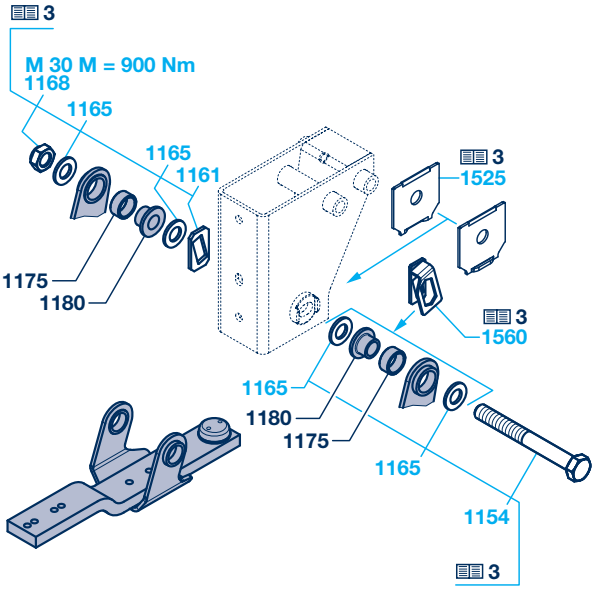

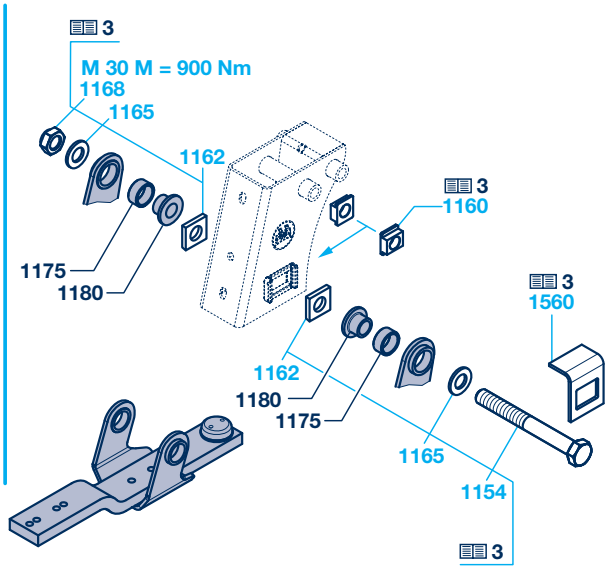

BPW Axle lift devices 10

Sidewise mounted axle lifts 10.1

Trailing arms 100 mm wide 10.1.2

Sidewise mounted axle lifts, trailing arms 100 mm wide				
Item	**Designation**	**Remark**	**BPW code no.:**	**Dimension**
1154 / 1156	Screw (spring bolt)		see Chap. 3	
1160	Slider			
1161	Plate (adjusting plate)			
1162	Plate			
1165	Washer			
1168	Lock nut			
1169	Castle nut	for aluminium hanger bracket		
1170	Split pin	for aluminium hanger bracket		
1175	Bush		03.113.94.10.0	Ø 41 / 50 x 23
1180	Bush (graduated bush)		03.113.01.29.0	Ø 30 / 40 / 46 x 31
			03.113.01.47.0	Ø 30 / 40 / 62 x 31
	Ring		03.310.30.49.0	Ø 30 / 39 x 25
1200	Air bag		see Chap. 4	
1224	Locking screw	welded lever	03.340.12.21.0	M 16 x 30
	Locking screw	solid Lever	02.5070.95.00	M 16 x 65
1525	Shaped plate		see Chap. 3	
1560	Shaped plate (welded on torsion protection with steel hanger brackets)			
	Adjusting plate with welded on torsion protection			
			Solid, screwed lifting arm	
1610	Lifting arm		03.195.00.97.0	L = 680
1615	Support	for steel hanger bracket	05.189.12.38.0	B = 166
		for steel hanger bracket	05.189.13.19.0	B = 176
		for aluminium hanger bracket	05.189.07.38.0	B = 193
1224	Locking screw		02.5070.95.00	M 16 x 65
1620	Lock nut *		02.5220.23.82	VM 16 / 980-8
1625	Bumper		02.3506.02.00	Ø 80 / M 12
* For lifting arm without threaded holes				
			Welded lifting arm	
1630	Support		05.189.14.65.0	L = 656, H = 87
Alternative versions on request.				
1224	Locking screw		02.5071.06.10	M 16 x 40
1635	Bumper		02.3506.02.00	Ø 80 / M 12

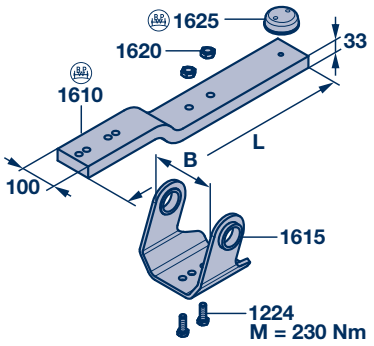

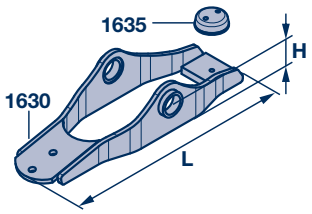

Fig. for spare parts see Chap. 3.

10 BPW Axle lift devices

10.2 Central mounted axle lifts

O
SL
AL

Central mounted axle lifts

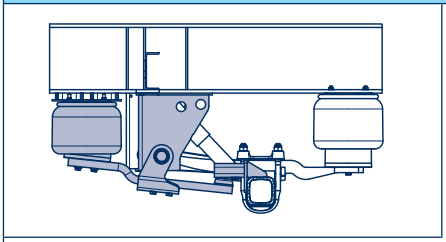

Rigid steel hanger bracket

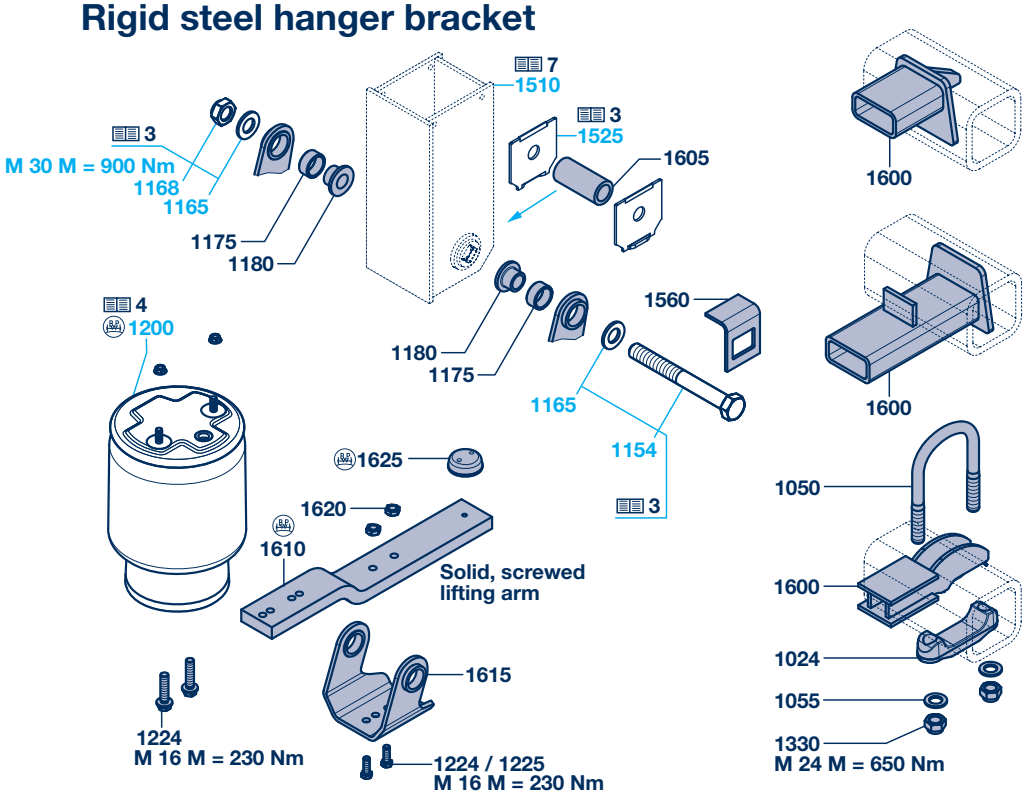

Rigid aluminium hanger bracket

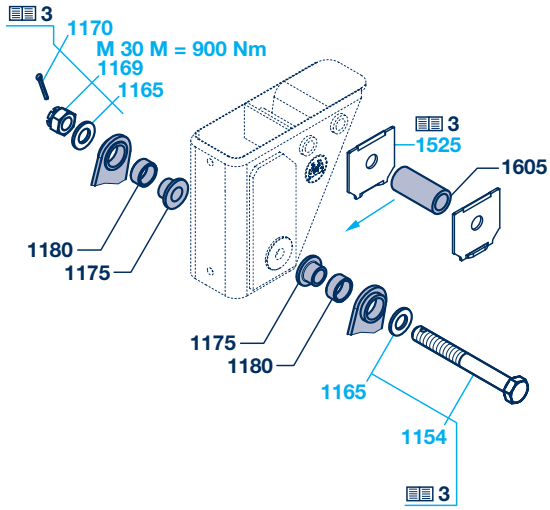

BPW Axle lift devices 10

Central mounted axle lifts 10.2

Central mounted axle lifts

Item	Designation	Remark	BPW code no.:	Dimension
1154 / 1156	Screw (spring bolt)		see Chap. 3	
1165	Washer			
1168	Lock nut			
1169	Castle nut	for aluminium hanger bracket		
1170	Split pin	for aluminium hanger bracket		
1175	Bush		03.113.94.10.0	Ø 41 / 50 x 23
1180	Bush (graduated bush)		03.113.01.29.0	Ø 30 / 40 / 46 x 31
			03.113.01.47.0	Ø 30 / 40 / 62 x 31
1200	Air bag		see Chap. 4	
1224	Locking screw	solid lever	02.5070.95.00	M 16 x 65
1510	Hanger brackets		see Chap. 7	
1525	Shaped plate		see Chap. 3	
1560	Shaped plate (welded on torsion protection with steel hanger brackets)		03.161.35.07.0	
			Support above the axle	
1600	Support	Welded	05.189.06.53.0	☐ 120/150, Ø 127
			Support below the axle	
			05.189.07.31.0	☐ 120, Ø 127
			05.189.07.32.0	☐ 150

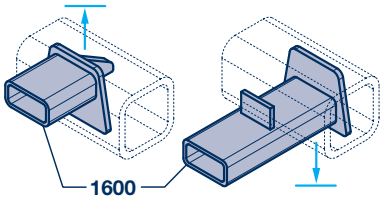

			Support above the axle	
1600	Support	Clamped	05.189.15.50.0	
1024	Spring pad		03.032.26.62.0	
1050	U-bolts		03.138.41.32.4	M 24 / 152 x 210
1055	Washer		02.5401.25.07	A 25
1330	Lock nut		02.5220.74.12	VM 24 - 10

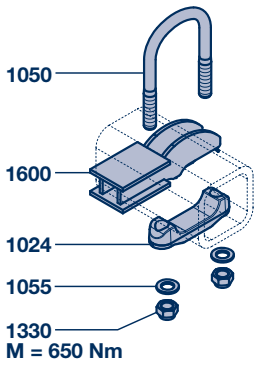

1605	Tube		03.301.74.04.0	Ø 35 / 51 x 102
			03.301.74.22.0	Ø 35 / 51 x 112
			Solid, screwed lifting arm	
1610	Lifting arm		03.195.00.96.0	L = 720
1615	Support	for steel hanger bracket	05.189.12.38.0	B = 166
		for steel hanger bracket	05.189.13.19.0	B = 176
		for aluminium hanger bracket	05.189.07.38.0	B = 193
1224	Locking screw		02.5070.95.00	M 16 x 65
1225	Hexagon screw		02.5026.35.12	M 16 x 45
1620	Lock nut *		02.5220.23.82	VM 16 / 980-8
1625	Bumper		02.3506.02.00	Ø 80 / M 12

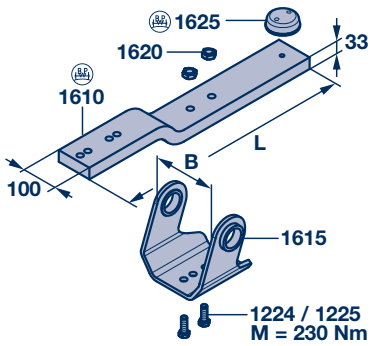

* For lifting arm without threaded holes

Fig. for spare parts see Chap. 3.

10 BPW Axle lift devices

10.2 Central mounted axle lifts

10.2.1 Central axle lift

O
SL
AL

Central axle lift

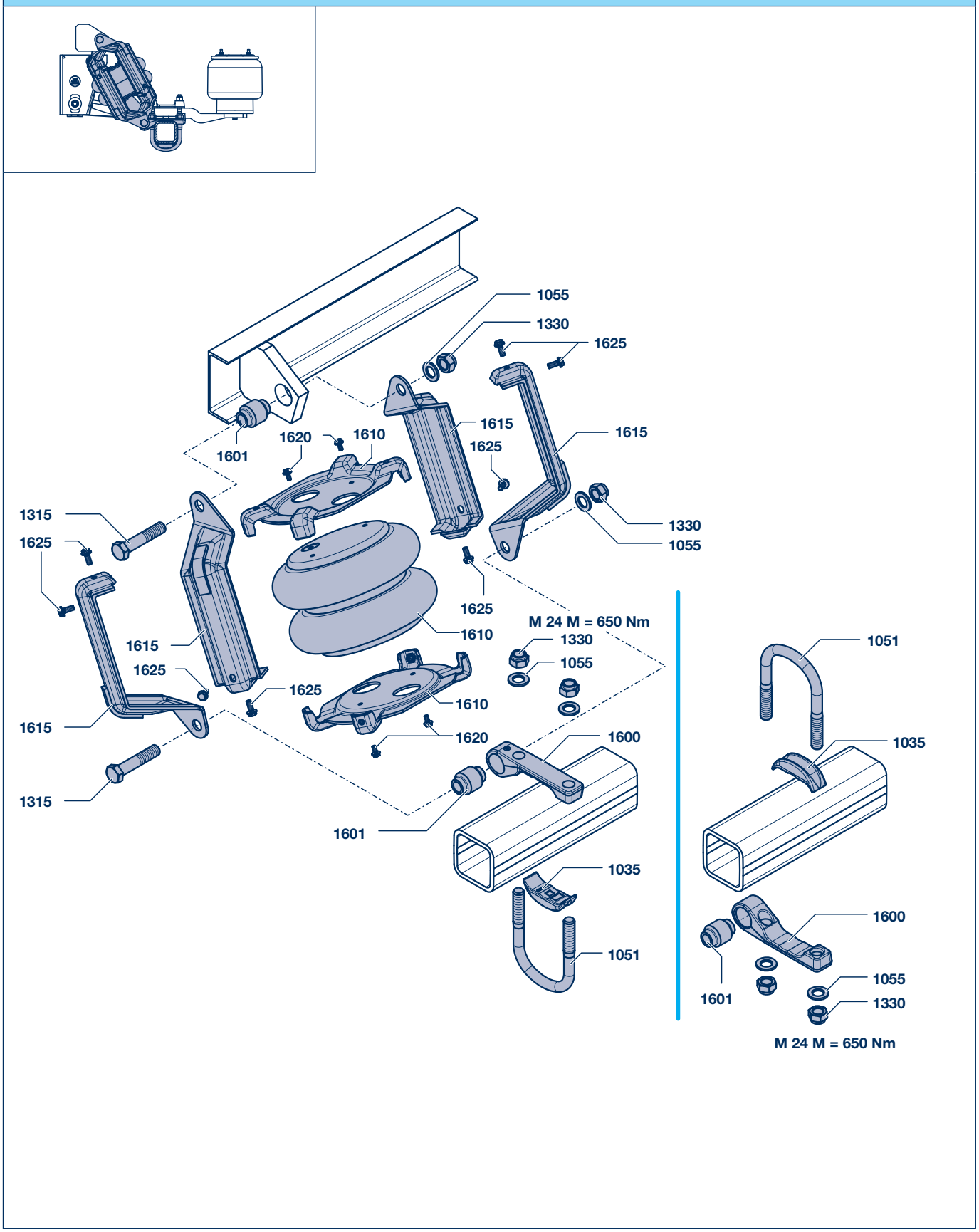

BPW Axle lift devices 10

Central mounted axle lifts 10.2

Central axle lift 10.2.1

Central axle lift					
Item	**Designation**	**Remark**	**BPW code no.:**	**Dimension**	
1035	Segment	for ☐ 120	03.345.23.02.1	41 x 122.5	
1051	U-bolts	for ☐ 120	03.138.41.31.4	M 24 / 152 x 190	
1055	Washer		02.5401.25.07	Ø 25 / 125	
1315	Hexagon screw		02.5023.29.82	M 24 x 120 / 931	
1330	Lock nut		02.5220.74.12	VM 24 / 980-10	
1600	Support incl. item 1601	for ☐ 120	05.189.13.28.0		
1601	Bush		05.113.90.06.0	Ø 24 / 50 x 68	
1610	Shaped plate		05.165.37.45.0		
1615	Shaped plate		05.165.49.44.0		
1620	Locking screw		02.5070.93.02	M 8 x 12 (4x)	
1625	Locking screw		02.5070.63.02	M 10 x 25 (8x)	
1680	Air bag		02.2002.19.00		

10 BPW Axle lift devices

10.3 Two-sided axle lifts

10.3.1 Trailing arms 70 mm wide

AL

Two-sided axle lift, steel hanger brackets

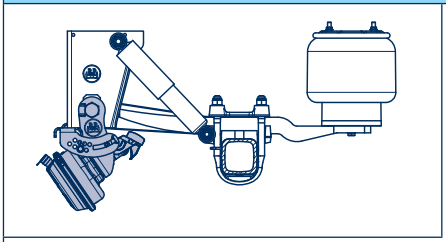

Normal box-section hanger bracket

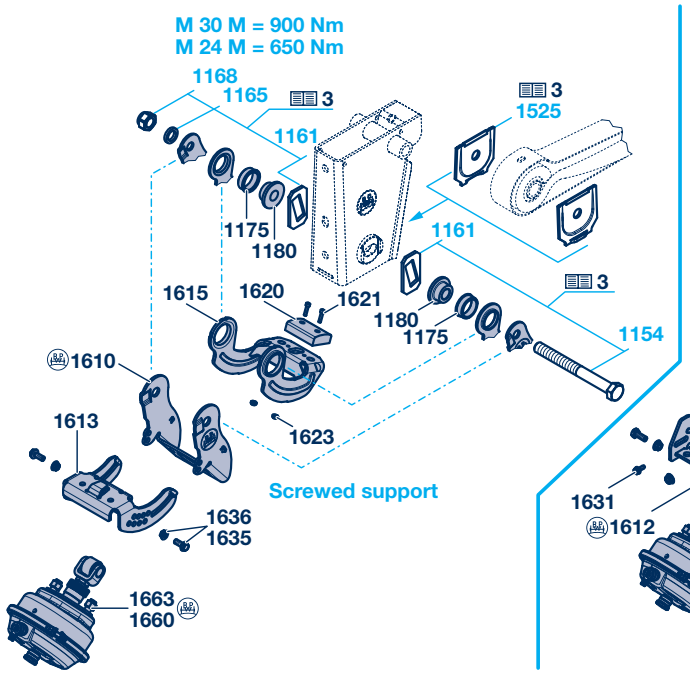

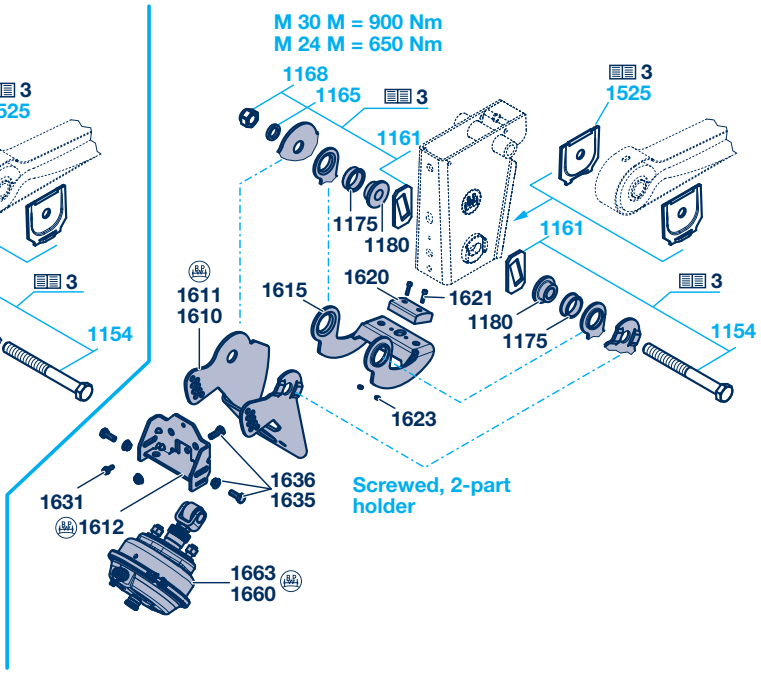

Bolt-on hanger bracket, bolt-on gusset plates

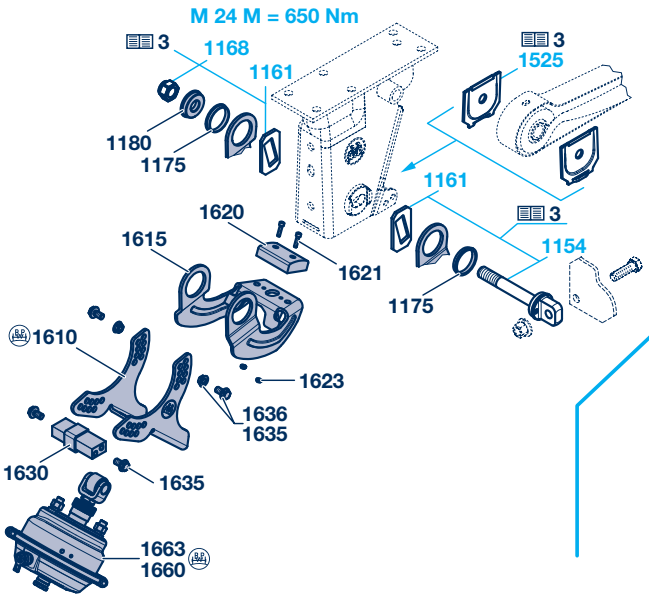

Channel cross member

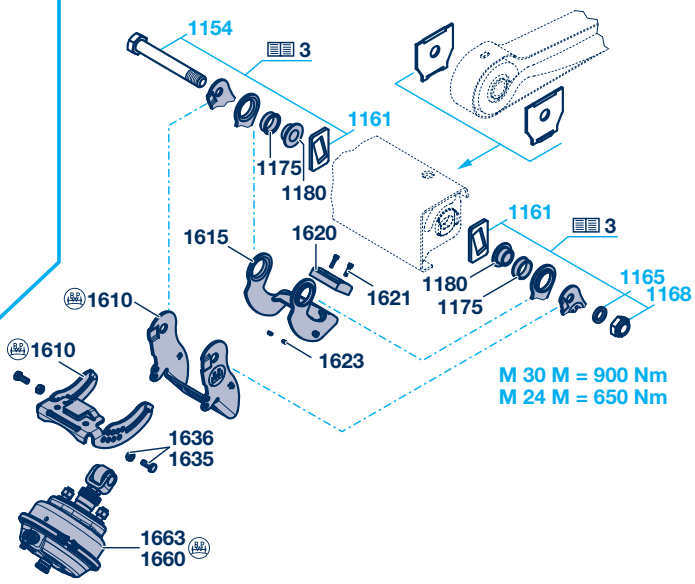

BPW Axle lift devices 10

Two-sided axle lifts 10.3

Trailing arms 70 mm wide 10.3.1

AL

Two-sided axle lift, steel hanger brackets

Item	Designation	Remark	BPW code no.:	Dimension	
1154 - 1156	Screw (spring bolt)		see Chap. 3		
1161	Plate (adjusting plate)				
1165	Washer				
1168	Lock nut				
1175	Bush		03.113.04.11.0	Ø 42 / 50 / 54 x 17.5	
			03.113.06.16.0	Ø 54 / 58 / 62 x 9	
1180	Bush (graduated bush)	Ø 24	03.113.00.28.0	Ø 24 / 42 / 62 x 22	
		Ø 24	03.113.00.51.0	Ø 24 / 42 / 62 x 24	
		Ø 24	03.112.05.03.0	Ø 24 / 54 / 59 x 13	
		Ø 30	03.113.01.37.0	Ø 30 / 42 / 62 x 22	
1525	Shaped plate		see Chap. 3		
			Screwed support		
1610	Shaped plate	Ø 30	03.165.46.52.0	B = 175	
		Ø 24	03.165.40.48.0 03.165.40.69.0	B = 175 B = 175 (ALII round)	
1613	Shaped plate	Steel hanger brackets	05.165.46.57.0 05.165.46.66.0	B = 189 B = 189	
		Channel cross member	03.165.46.53.0	B = 189 (ALII round)	
1635	Locking screw		02.5071.53.11	M 12 x 30 / SW 17	
1636	Lock nut		02.5273.33.80	M 12-10 / SW 17	
Alternative versions on request.					
			Screwed, 2-part holder		
1610	Support, right		03.189.14.98.0	B = 175	
1611	Support, left		03.189.14.97.0	B = 175	
1612	Support		03.189.14.96.0		
1631	Locking screw		02.5071.23.00	M 8 x 20	
1635	Locking screw		02.5071.53.11	M 12 x 30 / SW 17	
1636	Lock nut		02.5220.14.82	VM 12 / 980-8	
			Screwed support with square bar		
1610	Shaped plate		03.165.40.54.0	B = 129	
1630	Square bar		05.441.01.21.0	□ 25 / 40 x 117	
1635	Locking screw		02.5071.53.11	M 12 x 30 / SW 17	
1636	Lock nut		02.5273.33.80	M 12-10 / SW 17	
1615	Lever		05.190.44.12.0	B = 146	
		Reinforced	05.190.44.22.0	B = 146	
			05.190.44.15.0	B = 170	
1620	Bumper		02.3506.06.00	90 x 60 x 25	
1621	Cylinder cap screw		02.5015.04.80	M 6 x 25	
1623	Lock nut		02.5220.07.82	VM 6 / 980-8	
1660	Lift cylinder incl. item 1663	normal	05.444.10.37.0	Type 36, stroke > 90 mm	M 16 x 1.5
		verstärkt	05.444.10.38.0	Type 44, stroke > 90 mm	M 20 x 2.5
1663	Hexagon nut		02.5202.21.80	M 16 x 1.5	
Fig. for spare parts see Chap. 3.					

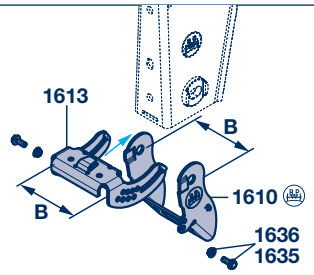

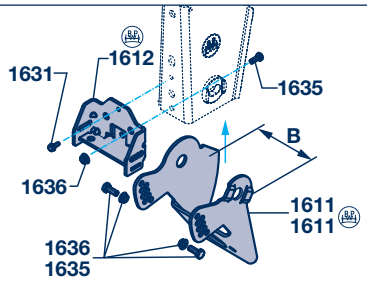

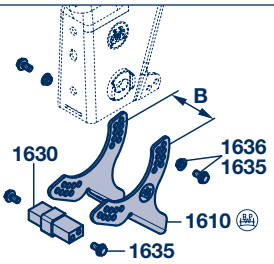

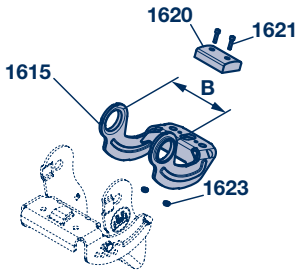

10 BPW Axle lift devices

10.3 Two-sided axle lifts

10.3.2 Trailing arms 70 mm wide

AL

Two-sided axle lift, aluminium hanger bracket

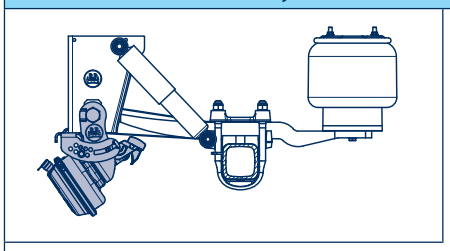

Rigid aluminium hanger bracket

M 30 M = 900 Nm
M 24 M = 650 Nm

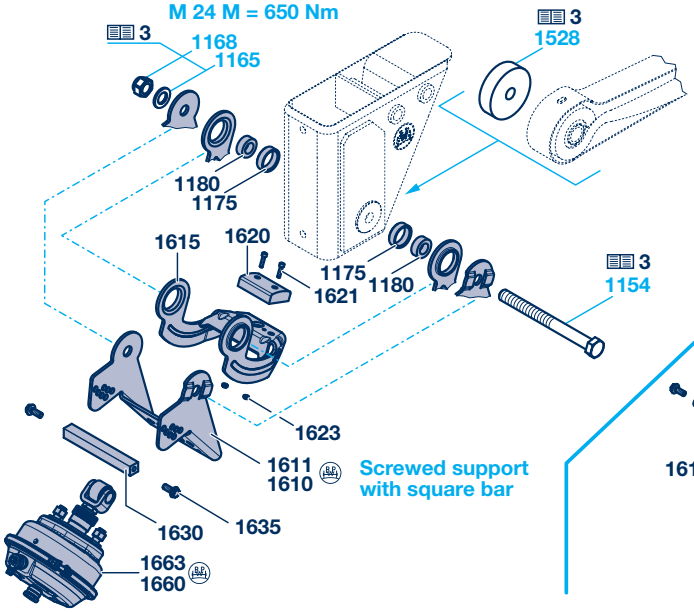

Adjustable cast aluminium hanger bracket

M 30 M = 900 Nm
M 24 M = 650 Nm

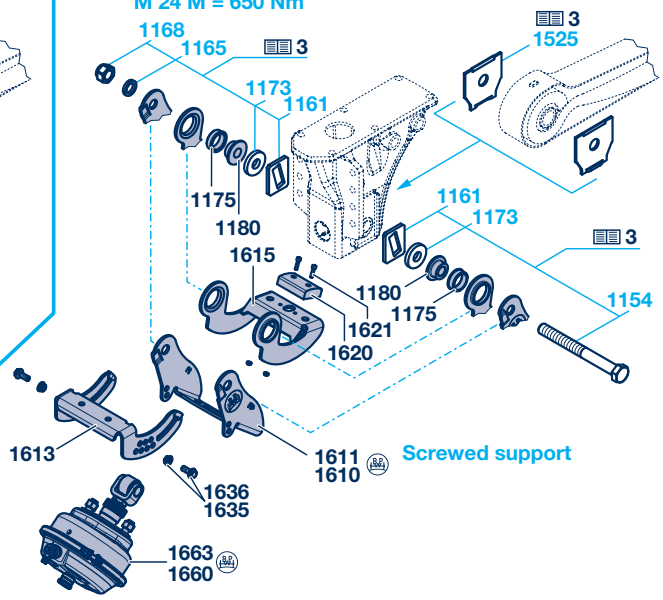

Adjustable alu hanger bracket

M 30 M = 900 Nm
M 24 M = 650 Nm

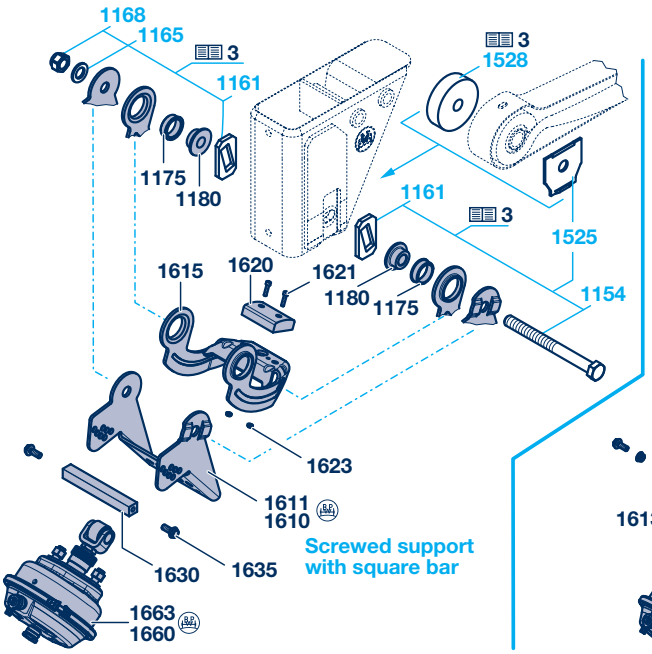

Adjustable alu channel cross member

M 30 M = 900 Nm
M 24 M = 650 Nm

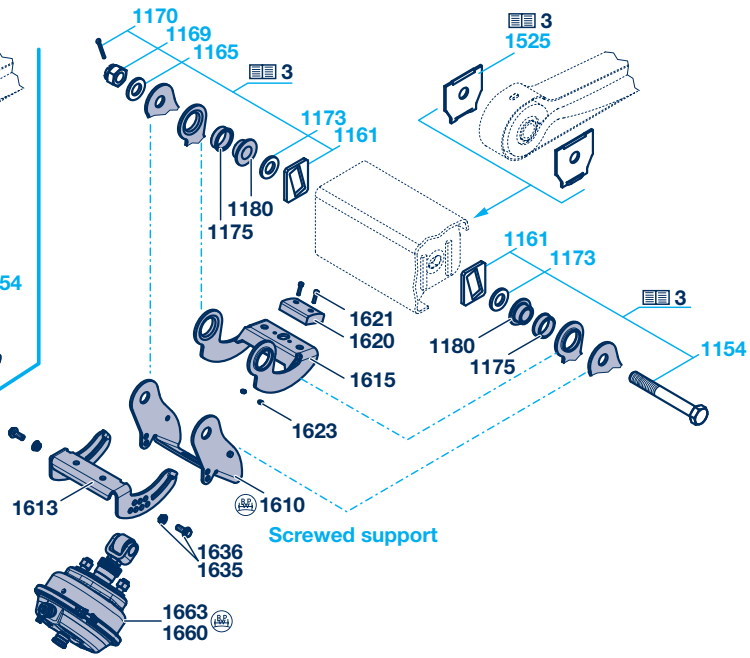

BPW Axle lift devices 10

Two-sided axle lifts 10.3

Trailing arms 70 mm wide 10.3.2

AL

Two-sided axle lift, aluminium hanger bracket				
Item	**Designation**	**Remark**	**BPW code no.:**	**Dimension**
1154 - 1156	Screw (spring bolt)		see Chap. 3	
1161	Plate (adjusting plate)			
1165	Washer			
1168	Lock nut			
1169	Castle nut			
1170	Split pin			
1173	Washer			
1175	Bush		03.113.04.11.0	Ø 42 / 50.5 / 54 x 17
	Ring	Aluminium hanger bracket	03.310.92.09.0	Ø 42 / 50 x 15
1180	Bush (graduated bush)	Ø 24	03.113.00.58.0	Ø 24 / 42 / 62 x 20.5
		Ø 24	03.113.00.28.0	Ø 24 / 42 / 62 x 22
		Ø 30	03.113.01.37.0	Ø 30 / 42 / 62 x 22
1525	Shaped plate		see Chap. 3	
1528	Washer (distance washer)			
			Screwed support	
1610	Shaped plate	Ø 24	03.165.40.48.0	B = 175
		Ø 30	03.165.46.52.0	B = 175
		Ø 24	03.165.46.59.0	B = 205
		Ø 30	03.165.46.54.0	B = 205
1613	Support		05.189.15.88.0	B = 189
			05.189.14.25.0	B = 219
		Cast aluminium hanger bracket	05.189.15.34.0	B = 219
1635	Locking screw		02.5071.53.11	M 12 x 30 / SW 17
1636	Lock nut		02.5273.33.80	M 12-10 / SW 17
			Screwed support with square bar	
1610	Support, right		03.189.15.68.0	B = 205
1611	Support, left		03.189.15.69.0	B = 205
1630	Square bar		05.441.01.18.0	□ 25 x 205
1635	Locking screw		02.5071.53.11	M 12 x 30 / SW 17
1615	Lever		05.190.44.12.0	B = 146
			05.190.44.14.0	B = 176
1620	Bumper		02.3506.06.00	90 x 60 x 25
1621	Cylinder cap screw		02.5015.04.80	M 6 x 25
1623	Lock nut		02.5220.07.82	VM 6 / 980-8
1660	Lift cylinder incl. item 1663	Standard	05.444.10.37.0	Type 36, stroke > 90 mm
1663	Hexagon nut	Reinforced	02.5202.21.80	M 16 x 1.5
Fig. for spare parts see Chap. 3.				

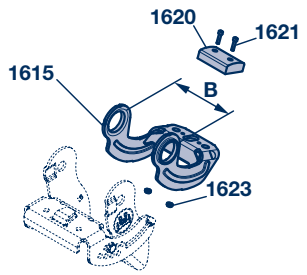

10 BPW Axle lift devices

10.3 Two-sided axle lifts

10.3.3 Trailing arms 100 mm wide

O
SL
AL

Two-sided axle lift, steel and aluminium hanger bracket

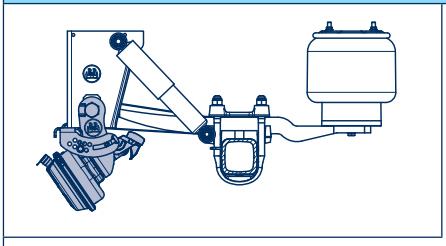

Standard / taper mounted steel hanger bracket

Rigid

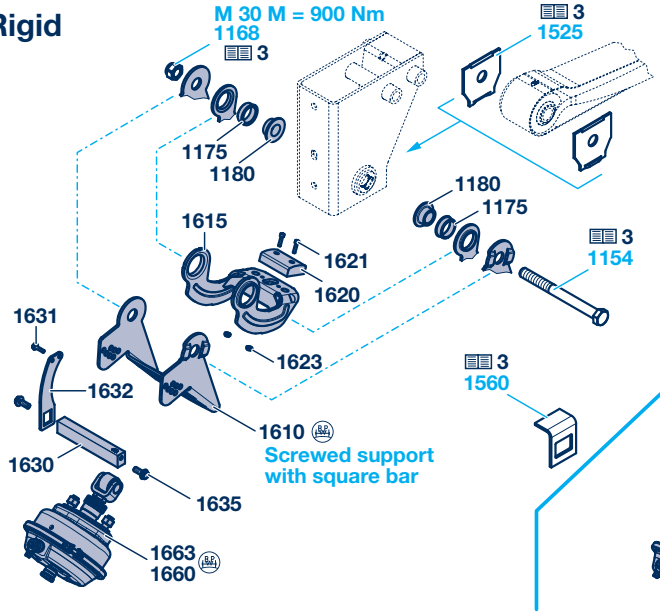

Adjustable

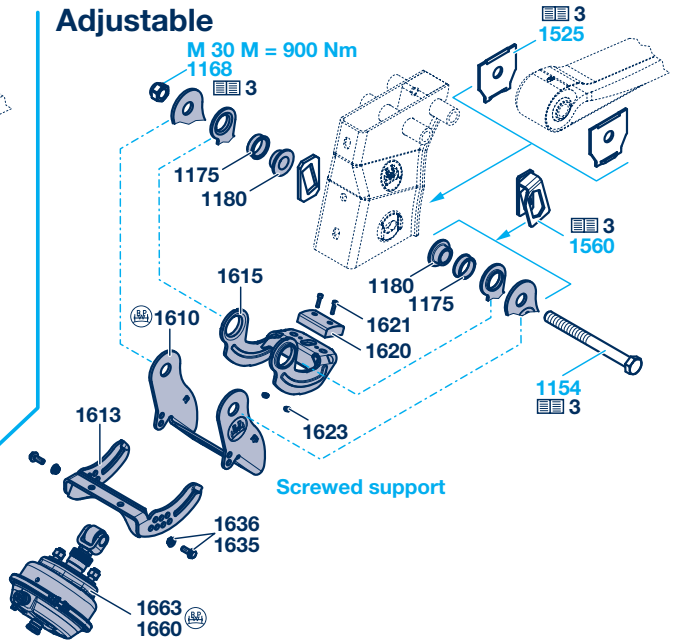

Aluminium hanger bracket

Rigid

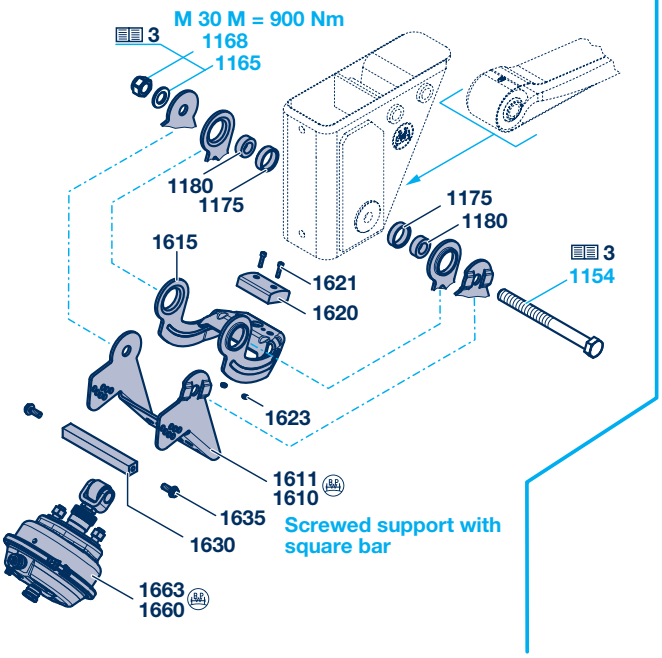

Adjustable

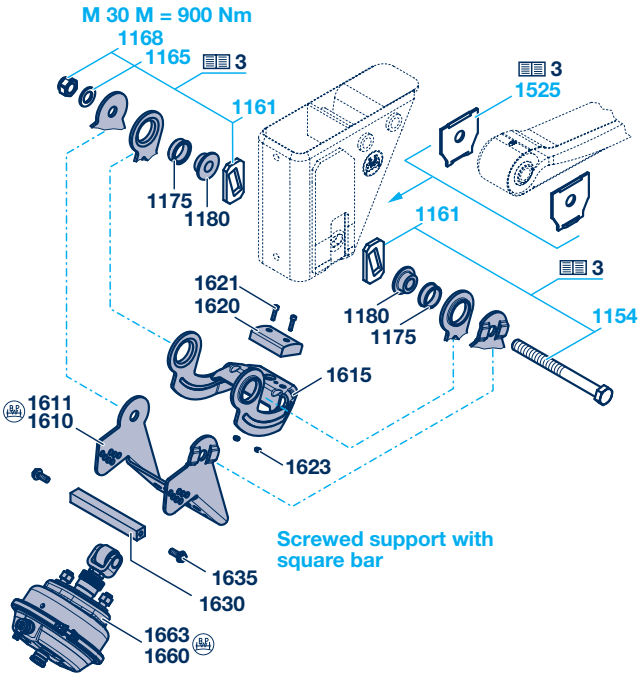

BPW Axle lift devices 10

Two-sided axle lifts 10.3

Trailing arms 100 mm wide 10.3.3

Two-sided axle lift, steel and aluminium hanger bracket					
Item	**Designation**	**Remark**	**BPW code no.:**	**Dimension**	
1154 - 1156	Screw (spring bolt)		see Chap. 3		
1161	Plate (adjusting plate)				
1165	Washer				
1168	Lock nut				
1169	Castle nut				
1170	Split pin				
1175	Bush		03.113.04.11.0	Ø 42 / 50 / 54 x 17.5	
1180	Bush (graduated bush)		03.113.01.37.0	Ø 30 / 42 / 62 x 22	
1525	Shaped plate		see Chap. 3		
1560	Adjusting plate with welded on torsion protection				
	Shaped plate (welded on torsion protection)				
	Formed piece (screwed-on torsion protection)				
			Screwed support		
1610	Shaped plate		03.165.46.54.0	B = 205	
		Reinforced	03.165.46.58.0	B = 205	
1613	Support		05.189.14.25.0	B = 219	
1635	Locking screw		02.5071.53.11	M 12 x 30 / SW 17	
1636	Lock nut		02.5273.33.80	M 12-10 / SW 17	
Alternative versions on request.					
			Screwed support with square bar		
1610	Support, right		03.189.14.22.0	B = 205	
		Reinforced	03.189.15.36.0	B = 205	
			03.189.15.24.0	B = 205	
1611	Support, left		03.189.14.21.0	B = 205	
		Reinforced	03.189.15.37.0	B = 205	
			03.189.15.25.0	B = 205	
1630	Square bar		03.441.01.18.0	☐ 25 x 205	
		Reinforced	03.441.01.19.0	☐ 25 / 35 x 205	
1631	Locking screw		02.5071.23.00	M 8 x 20 / SW 13	
1632	Plate	☐ 25	03.285.46.26.0	46 x 188 x 5	
		☐ 25 / 35	03.285.36.07.0	46 x 198 x 5	
1635	Locking screw		02.5071.53.11	M 12 x 30 / SW 17	
1615	Lever		05.190.44.14.0	B = 146	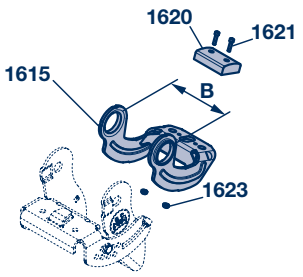
1620	Bumper		02.3506.06.00	90 x 60 x 25	
1621	Cylinder cap screw		02.5015.04.80	M 6 x 25	
1623	Lock nut		02.5220.07.82	VM 6 / 980-8	
1660	Lift cylinder incl. item 1663	Standard	05.444.10.37.0	Type 36, stroke > 90 mm	M 16 x 1.5
		Reinforced	05.444.10.38.0	Type 44, stroke > 90 mm	M 20 x 2.5
1663	Hexagon nut		02.5202.21.80	M 16 x 1.5	
Fig. for spare parts see Chap. 3.					

10 BPW Axle lift devices

10.3 Two-sided axle lifts

10.3.4 Installation instructions

O

SL

AL

Two-sided axle lift, installation instructions

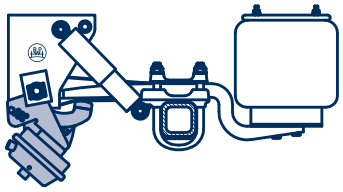

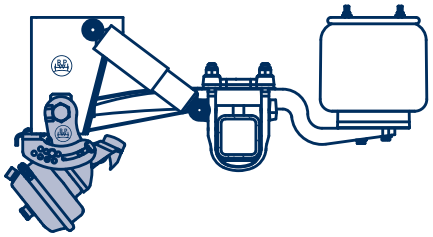

General

The BPW two-sided axle lift is suitable for the following axles and air suspension systems:

- 9 tonnes air suspension axles for single and twin wheels
- 10 tonnes air suspension axles with single wheels, not however for axles with greater permitted axle loads or for steering axles
- Air suspension systems with air bag types 30K, 30, 36K, 36 for spring deflections up to 220 mm, not however for long-travel air suspension systems with bag types 30-1, 36-1, 36-2, 36-5

The two-sided axle lift is fitted underneath the air suspension hanger brackets of the axle to be lifted. Please bear in mind the following points when using them:

- In air suspension systems with raising and lowering, the downward travel of the axles must be limited.
  The stroke limitation can take the form of an air suspension valve with integrated height limitation, a separate shut-off valve or of catch straps.

  The stroke limiting function must be set so that the axle lift cannot be overloaded at maximum lift.
- The ride height of the air suspension must be set to a min. upward travel of 100 mm. When the axle is lifted, the tyre damping results in a clearance of approx. 60 mm under the tyres.
- Make sure there is adequate ground clearance below the axle lift, in particular in air suspension systems with trailing arms located underneath to give a low vehicle height.
- Make sure the right and left sides of one hanger bracket have a symmetrical setting of the sliding blocks.
- After mounting the axle lift, check it functions correctly and that there is adequate clearance from the adjacent components.
- An air pressure of at least 6 bar is required to lift the axle.
- The permitted operating pressure is 8.5 bar.
  There is no need for a pressure control valve or a residual pressure holding feature.

  Free cylinder venting through cross sections without throttle points in the valve installation must be ensured in order to avoid impermissibly high pressure values.
- Comply with the appropriate statutory regulations when retrofitting an axle lift (e.g. overload protection, German „BO-Kraftkreis“, etc.).

BPW Axle lift devices 10

Two-sided axle lifts 10.3

Installation instructions 10.3.4

Two-sided axle lift, installation instructions

Perform the following installation steps when retrofitting the two-sided axle lift:

- Take the load off the lifting axle.
- Unscrew the spring bolt (M 30) and remove it.
- Install the two-sided axle lift as described in the supplied installation instructions. When doing this, only fit the spring bolts loose and do not tighten them yet.
- Install the diaphragm cylinder with the air connection upwards (M = 180 Nm).
- Fit plastic plugs into the diaphragm cylinder so the bottom hole is open whilst the top hole is tightly closed.
- Install the bumper under the air suspension hanger bracket (integrated support) in the position provided for the air suspension (M = 66 Nm).

  Refer to the technical documents for the air suspension for the corresponding position.

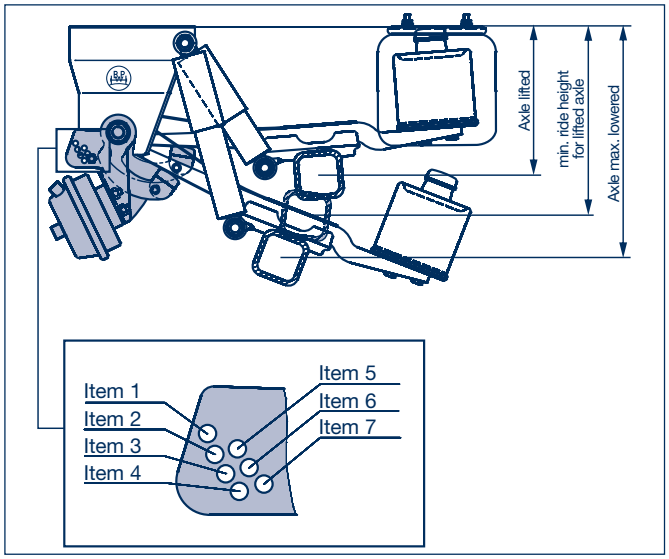

Proceed as follows if you do not have the corresponding technical documents:

- Raise the air suspension using the rotary disc valve or by disconnecting the air suspension linkage. Raise it until the air bags are fully extended.
- Pivot the axle lift towards the trailing arm by hand, until the plastic buffer makes contact with the trailing arm (the catch plate must be in contact with the trailing arm).
- In this position, fit the bump stop so it is in contact with the air suspension hanger bracket (channel cross member).
- Adjust the air suspension to the nominal ride height with the rotary disc in the "driving" position.
- Fit the spring bolt torsion protection.
- Tighten the spring bolt gland to the prescribed tightening torque (M = 650 / 900 Nm).
- Refer to the appropriate installation guidelines for the air suspension installation and valve connection.
- Perform a trial actuation to test that it is functioning reliably. Do not touch any moving parts of the axle lift when doing this. **RISK OF INJURY!**
- Check the spring bolt gland is firmly seated after the first drive under load.

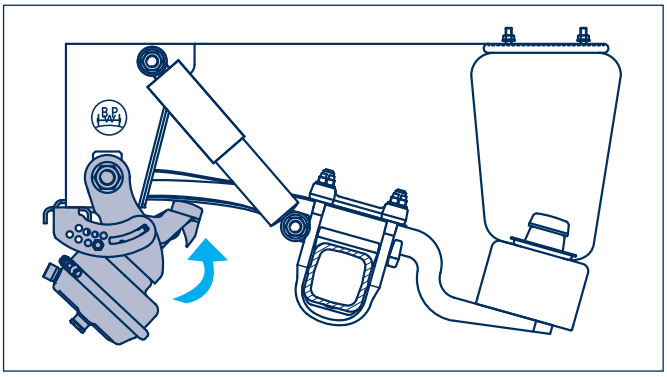

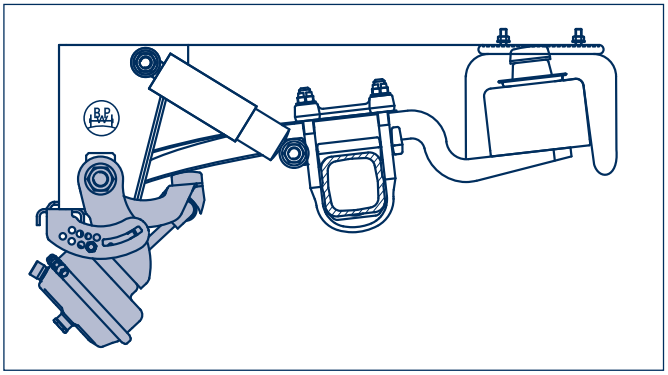

11 BPW ECO Air running gear systems

11.1 Spare parts

EA

Spare parts for ECO Air running gear systems

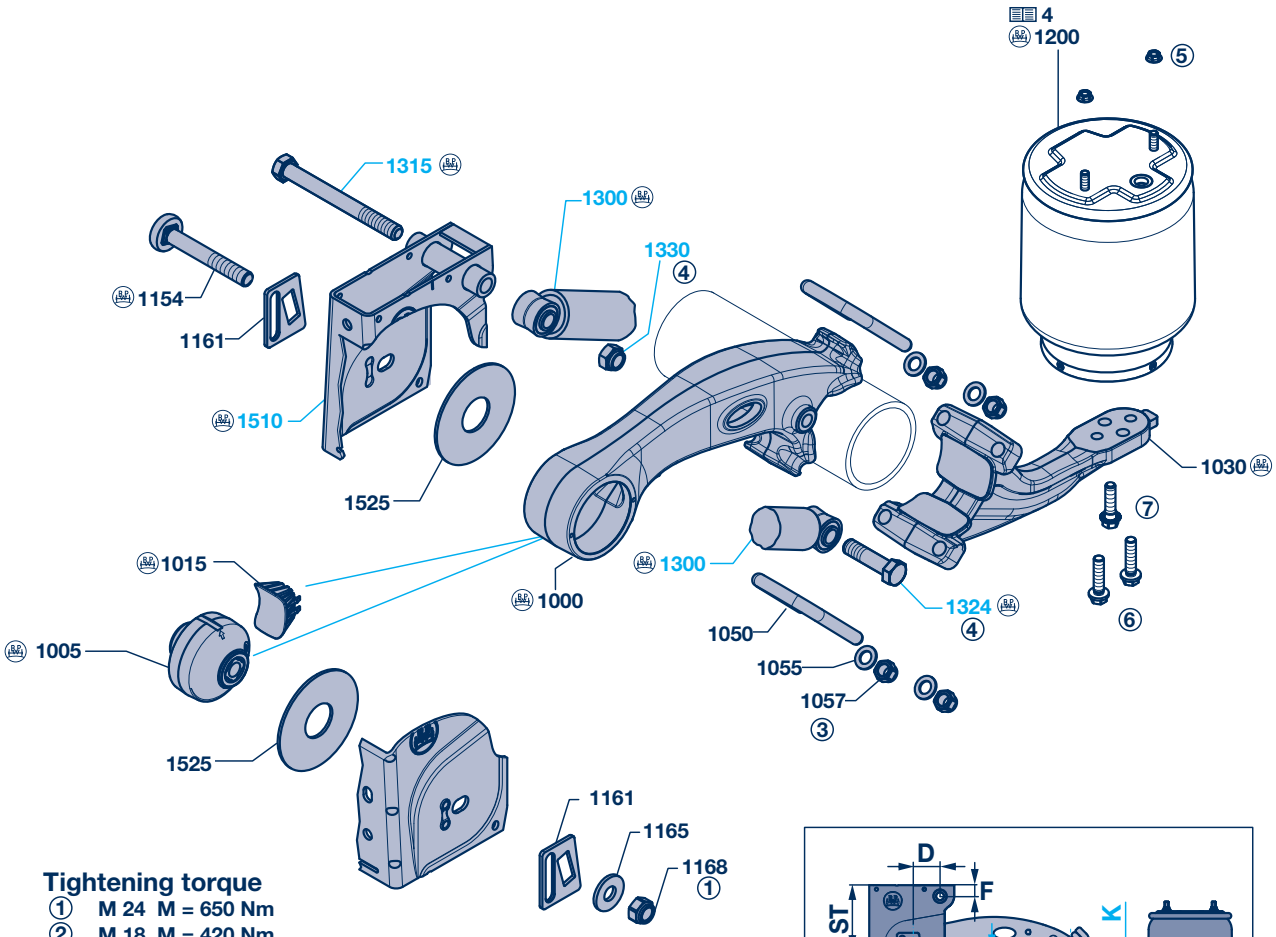

Tightening torque

① M 24 M = 650 Nm
② M 18 M = 420 Nm
③ M 20 M = 420 Nm + 90°
④ M 24 M = 420 Nm
⑤ M 12 M = 66 Nm
⑥ M 16 M = 230 - 300 Nm
⑦ M 16 M = 300 Nm

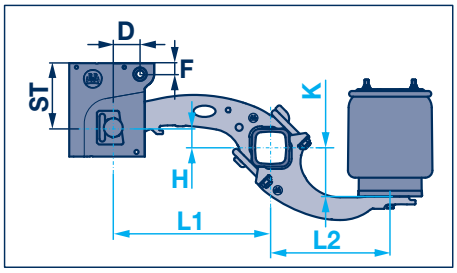

Spring pivot bolt bearing with spring bolt for screwed-on braces

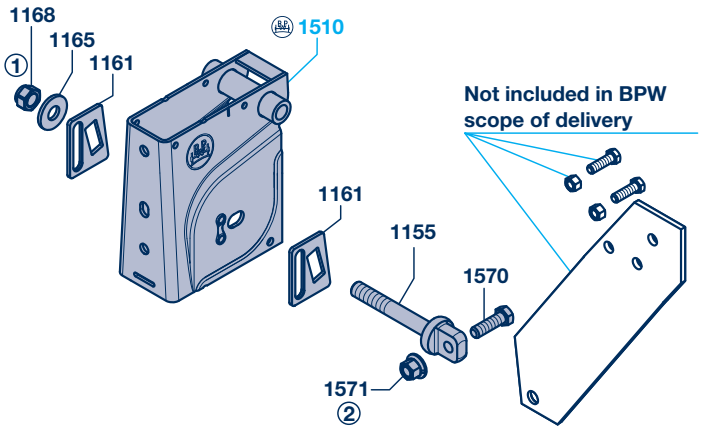

Hanger bracket with welding lugs for gusset plates

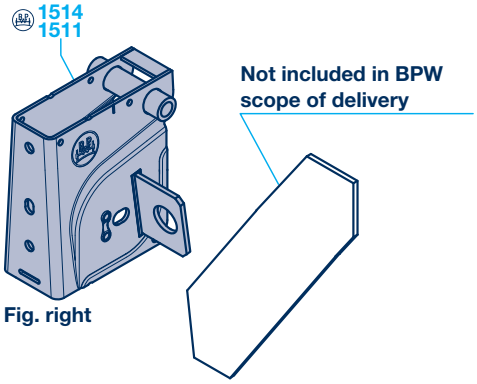

BPW ECO Air running gear systems 11

Spare parts 11.1

EA

Spare parts for ECO Air running gear systems

Item	Designation	Dimension	BPW code no.:	Qty. / Axle	EAAU	EAAM	EAAO	EABU	EABM	EABO
1000	Trailing arm incl. item 1004	L1 = 500 / H = 60 mm	05.244.20.18.0	2	◎	◎	◎			
		L1 = 500 / H = 130 mm	05.244.20.21.0	2				◎	◎	◎
1004	Repair kit bush for trailing arm Item 1005 + 1015		**09.801.08.20.0**	2	◎					
1005	Bush [1]	Ø 24 / 43 / 59 / 132 x 112	02.0314.38.00	2	◎					
1015	Plug [1]	60 x 83.5 x 44	03.379.00.39.0	2	◎					
[1] only available as kit (09.801.08.20.0)										
1030	Airbag beam	L2 = 380 mm, K = 155 mm	03.244.20.22.0	2	◎			◎		
		L2 = 380 mm, K = 85 mm	03.244.20.23.0	2		◎			◎	
		L2 = 380 mm, K = -10 mm	03.244.20.24.0	2			◎			◎
		L2 = 335 mm, K = -10 mm	03.244.20.25.0	2			◎			◎
1049	Repair kit spring seat arrangement Item 1050, 1055, 1057		**09.801.09.03.0**	2	◎					
1050	Spring U-bolt [2]	M 20 x 157 x 120	03.138.32.17.0	4	◎					
1055	Washer	A 21	02.5401.21.10	8	◎					
1057	Lock nut	M 20 - 10 / SW 30	03.260.04.21.0	8	◎					
[2] only available as kit (09.801.09.03.0)										
	Standard spring pivot bolt bearing									
1150	Repair kit spring pivot bolt bearing Item 1004, 1154 - 1168, 1525		**09.801.08.12.0**	2	◎					
1154	Screw (spring bolt)	M 24 x 171 / Ø 56	03.340.14.33.0	2	◎					
1161	Plate (adjusting plate)	107 x 85/70 x 6	03.281.34.12.0	4	◎					
1165	Washer	Ø 25 / 60 x 6	03.320.33.28.0	2	◎					
1168	Lock nut	M 24 / SW 36	03.260.14.13.0	2	◎					
1525	Washer (wearing plate)	Ø 59.1 / 170 x 4.5	03.320.38.29.0	4	◎					
	Spring pivot bolt bearing with spring bolt for screwed-on braces									
1155	Screw (spring bolt)	M 24 x 166 / Ø 56	03.340.14.24.0	2	◎					
1161	Plate (adjusting plate)	107 x 85/70 x 6	03.281.34.12.0	4	◎					
1165	Washer	Ø 25 / 60 x 6	03.320.33.28.0	2	◎					
1168	Lock nut	M 24 / SW 36	03.260.14.13.0	2	◎					
1525	Washer (wearing plate)	Ø 59.1 / 170 x 4.5	03.320.38.29.0	4	◎					
1570	Hexagon screw	M 18 x 1.5 x 60 - 10.9 / SW 27	02.5030.03.11	2	◎					
1571	Hexagon nut	M 18 x 1.5 / SW 27	05.260.53.07.0	2	◎					
1200	Air bag cpl.	see Chap. 4								

11 BPW ECO Air running gear systems

11.1 Spare parts

EA

Spare parts for ECO Air running gear systems

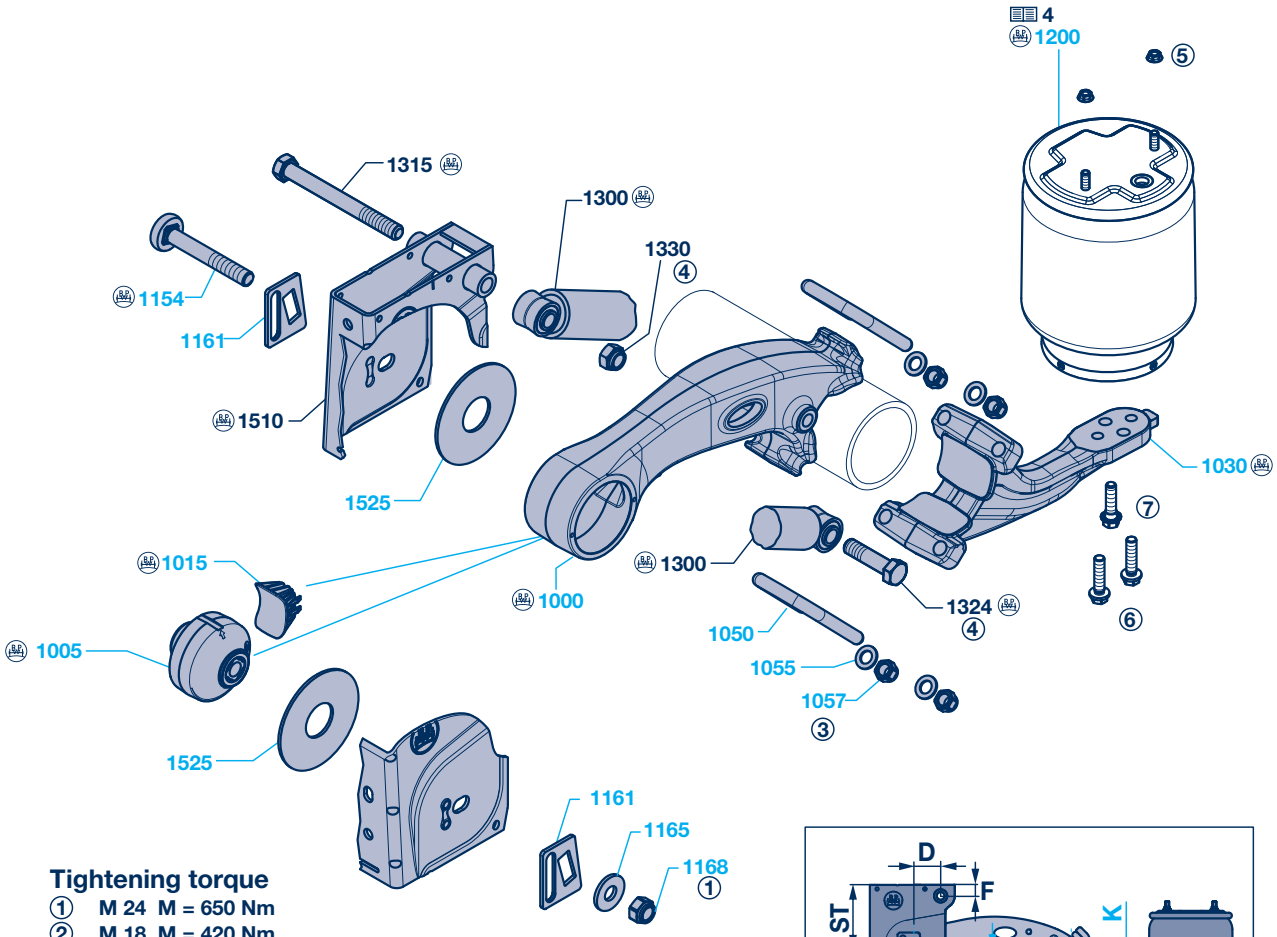

Tightening torque

1. M 24 M = 650 Nm
2. M 18 M = 420 Nm
3. M 20 M = 420 Nm + 90°
4. M 24 M = 420 Nm
5. M 12 M = 66 Nm
6. M 16 M = 230 - 300 Nm
7. M 16 M = 300 Nm

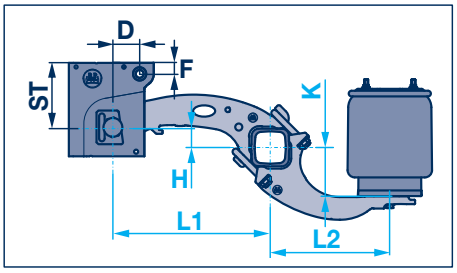

Spring pivot bolt bearing with spring bolt for screwed-on braces

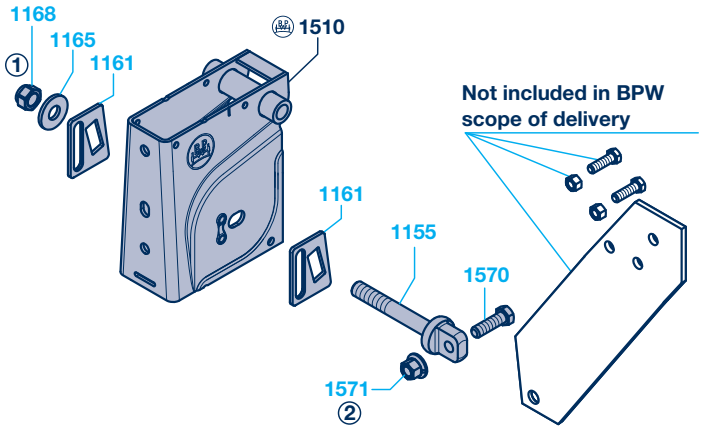

Hanger bracket with welding lugs for gusset plates

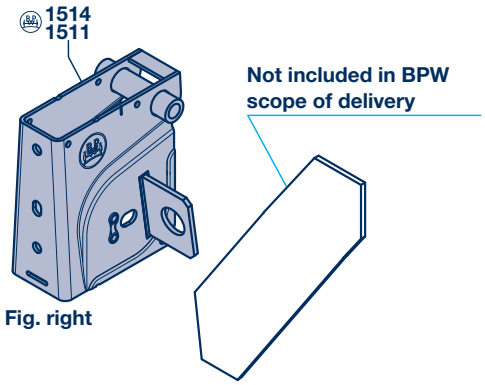

BPW ECO Air running gear systems 11

Spare parts 11.1

EA

Spare parts for ECO Air running gear systems

Item	Designation	Dimension		BPW code no.:	Qty. / Axle	EAAU	EAAM	EAAO	EABU	EABM	EABO
1300	Shock absorber incl. item 1302 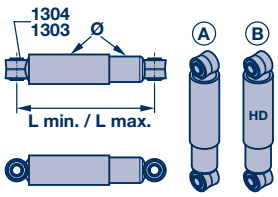	Ø 65 / 75 mm, L min. 287 mm, L max. 412 mm, X = 204 mm	A	02.3722.79.02	2	◎	◎				
			B HD	02.3732.05.02	2	◎	◎				
		Ø 65 / 75 mm, L min. 292 mm, L max. 432 mm, X = 204 mm	A	02.3722.89.02	2	◎	◎	◎		◎	
			B HD	02.3732.07.02	2	◎	◎	◎		◎	
		Ø 65 / 75 mm, L min. 326 mm, L max. 496 mm, X = 235 mm	A	**02.3722.83.02**	2				◎	◎	◎
			B HD	02.3722.04.02	2				◎	◎	◎
		Ø 65 / 75 mm, L min. 351 mm, L max. 541 mm, X = 250 mm	A	02.3722.88.02	2						◎
			B HD	02.3732.06.02	2						◎
1302	Repair kit shock absorber mount Item 1303 + 1304			**09.801.08.18.0**	4			◎			
1303	Bush *	Ø 24 / 32 x 55		02.0314.39.00	4			◎			
1304	Rubber bush *	Ø 23 / 50 x 25		02.2805.10.00	4			◎			
* only available as kit (**09.801.08.18.0**)!											
1315	Hexagon screw	M 24 x 240 - 8.8 / SW 36		03.340.14.19.0	2			◎			
1323	Repair kit shock absorber attachment Item 1324			**09.801.08.11.0**	2			◎			
1324	Hexagon screw	M 24 x 83 - 8.8 / SW 36		03.340.14.37.0	2			◎			
1330	Lock nut	VM 24 - 10 / SW 36		02.5220.74.12	2			◎			
	Standard hanger bracket										
1510	Hanger brackets	Ø 24 / ST 205 / B 90 / D 85 F 35 / K 77.5 / L 270		05.375.50.01.0	2	◎	◎	◎	◎	◎	◎
		Ø 24 / ST 290 / B 90 / D 85 F 67 / K 77.5 / L 270		05.375.50.02.0	2	◎	◎				◎
	Hanger bracket with welding lug for gusset plates										
1511	Hanger bracket, left	Ø 24 / ST 205 / B 90 / D 85 F 35 / K 77.5 / L 270		05.375.50.04.0	1	◎	◎	◎	◎	◎	◎
		Ø 24 / ST 290 / B 90 / D 85 F 67 / K 77.5 / L 270		05.375.50.05.0	1	◎	◎				◎
1514	Hanger bracket, right	Ø 24 / ST 205 / B 90 / D 85 F 35 / K 77.5 / L 270		05.375.50.03.0	1	◎	◎	◎	◎	◎	◎
		Ø 24 / ST 290 / B 90 / D 85 F 67 / K 77.5 / L 270		05.375.50.06.0	1	◎	◎				◎
		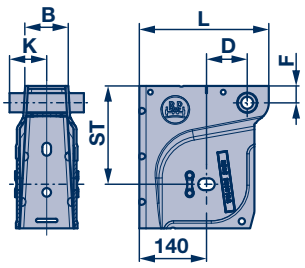									

11 BPW ECO Air running gear systems

11.2 Two-sided lift, ECO Air

EA

Two-sided lift, ECO Air

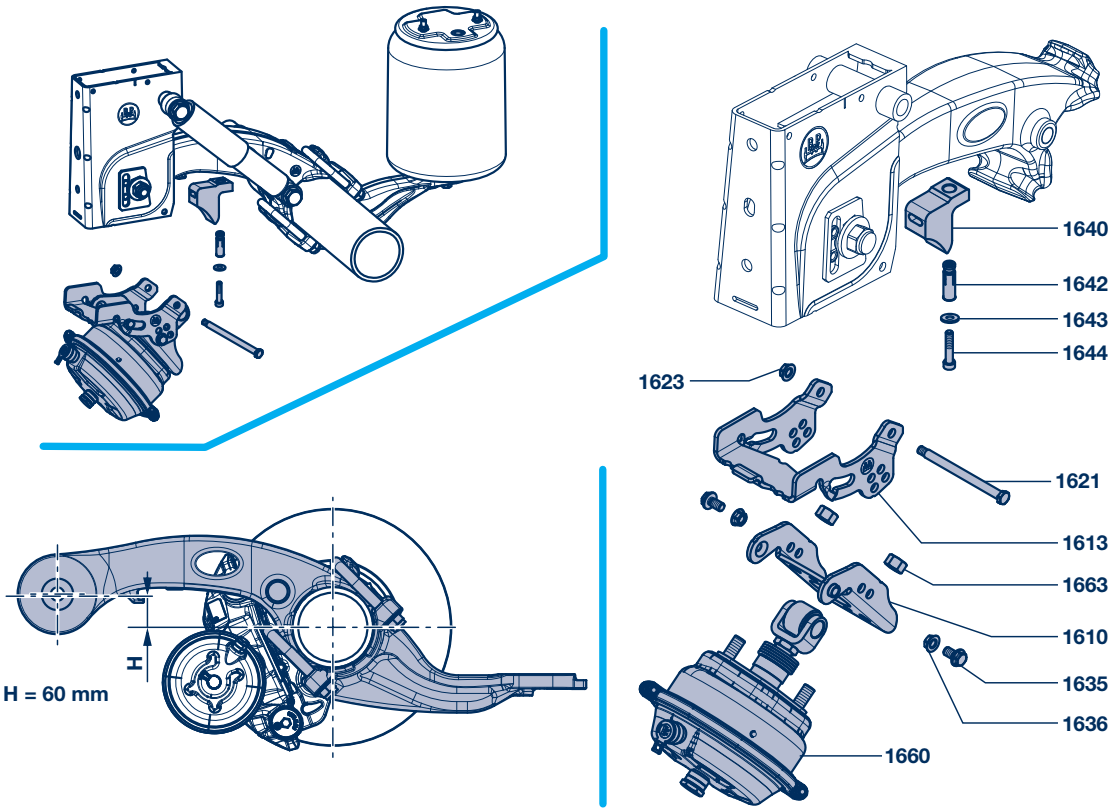

Item	Designation	Remark	BPW code no.:	Dimension	BPW code no.:	Dimension
			H = 60 mm		H = 130 mm	
1600	Two-sided axle lift cpl. Item 1610 - 1660		05.828.32.05.0	H = 60	05.828.32.06.0	H = 130
1610	Support		03.189.15.98.0			
1613	Shaped plate		03.165.46.62.0			
1621	Bolt		03.084.12.06.0	Ø 12 / M 10 x 163 / SW 16		
1623	Lock nut		02.5273.28.87	M 10		
1635	Locking screw		02.5071.59.11	M 12 x 22 / SW 17		
1636	Lock nut		02.5273.33.80	M 12 - 10 / SW 17		
1639	Repair kit formed part Item 1640 - 1644		**09.801.08.13.0**	for 1 axle side	**09.801.08.24.0**	for 1 axle side
1640	Shaped part		03.001.35.17.0	for H = 60	03.001.35.19.0	for H = 130
1642	Dowel		02.0130.87.10	M 10		
1643	Washer		02.5401.10.11	A 10		
1644	Cylinder cap screw		02.5015.27.82	M 10 x 50 / SW 8		
1660	Lift cylinder incl. item 1663		05.444.10.41.0			
1663	Hexagon nut		02.5202.21.80	M 16 x 1.5 / SW 24		

BPW ECO Air running gear systems 11

Sidewise mounted axle lift, ECO Air 11.3

Sidewise mounted axle lift, ECO Air

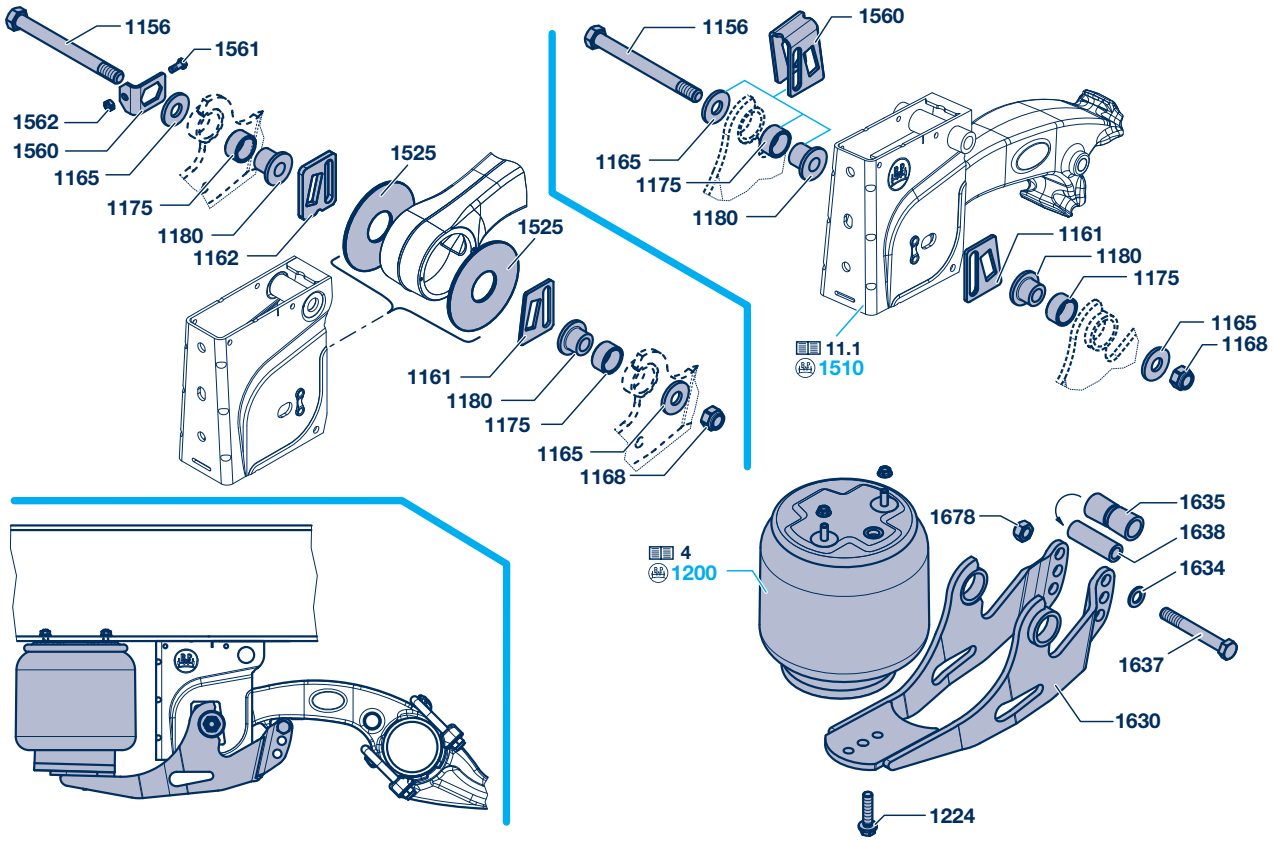

Item	Designation	Remark	BPW code no.:	Dimension	BPW code no.:	Dimension
	Axle lift device 1156 - 1640		05.828.32.07.0		05.828.32.25.0	
1156	Screw (spring bolt)		02.5030.63.13	M 24 x 2 x 250 / SW 36	02.5030.63.13	M 24 x 2 x 250 / SW 36
1161	Plate (adjusting plate)		03.281.34.12.0	107 x 85 / 70 x 6	03.281.34.12.0	107 x 85 / 70 x 6
1162	Plate (adjusting plate)				03.281.34.14.0	107 x 82 x 10
1165	Washer		03.320.33.28.0	Ø 25 / 60 x 6	03.320.33.28.0	Ø 25 / 60 x 6
1168	Lock nut		03.260.14.13.0	M 24 / SW 36	03.260.14.13.0	M 24 / SW 36
1175	Bush		03.112.45.13.0	Ø 40.5 / 50 x 26	03.112.45.13.0	Ø 40.5 / 50 x 26
1180	Graduated bush		03.113.00.54.0	Ø 24 / 40 / 62 x 33.5	03.113.00.54.0	Ø 24 / 40 / 62 x 33.5
1200	Air bag incl. item 1224		05.429.43.86.0	see Chap. 4	05.429.43.86.0	see Chap. 4
1224	Locking screw		02.5071.61.16	M 16 x 61	02.5071.61.16	M 16 x 61
1510	Hanger brackets		see Chap. 11.1		see Chap. 11.1	
1525	Wearing plate				03.320.38.29.0	Ø 59,1 / 170 x 4.5
1560	Adjusting plate with torsion protection		03.001.32.07.0		03.001.32.09.0	
1561	Hexagon screw				02.5025.61.82	M 10 x 25 / SW 16
1562	Lock nut				02.5273.10.82	M 10 / SW 17
1630	Lifting arm		05.189.15.99.0		05.189.16.75.0	
1634	Washer				02.5401.21.04	Ø 21
1635	Bush		03.112.43.13.0	Ø 32 / 41 x 98	03.112.43.13.0	Ø 32 / 41 x 98
1637	Hexagon screw		02.5023.14.80	M 20 x 150	02.5023.14.80	M 20 x 150
1638	Tube		03.300.73.54.0	Ø 21 / 31 x 100	03.300.73.54.0	Ø 21 / 31 x 100
1678	Lock nut		02.5220.50.82	M 20	03.260.03.12.0	M 20 / SW 30

11 BPW ECO Air running gear systems

11.4 Central axle lift device, ECO Air

EA

Central axle lift device, ECO Air

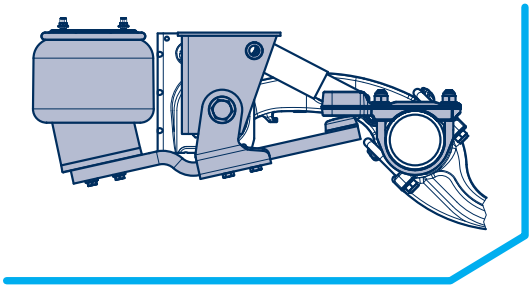

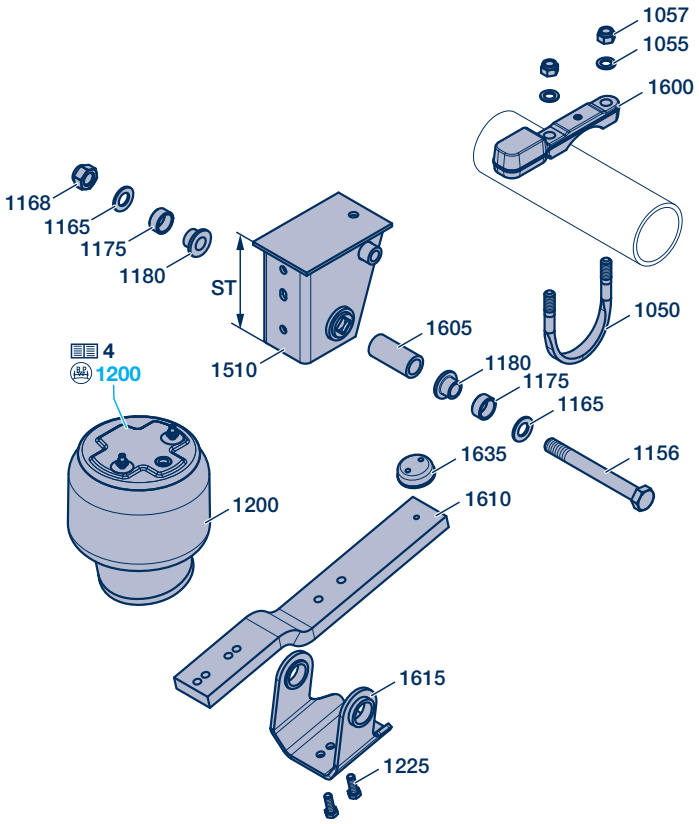

Item	Designation	Remark	BPW code no.:	Dimension	BPW code no.:	Dimension
			Hanger bracket height ST = 192 mm		Hanger bracket height ST = 276 mm	
	Axle lift device cpl. Item. 1050 - 1635		05.828.32.22.0		05.828.32.23.0	
1050	Spring U-bolt (flattened)		03.138.37.21.4	M 22 / 148 / 169 x 198	03.138.37.21.4	M 22 / 148 / 169 x 198
1055	Washer		02.5401.23.07	A 23	02.5401.23.07	A 23
1057	Lock nut		03.260.04.19.0		03.260.04.19.0	
1156	Hexagon screw (Spring bolt)		03.340.15.48.0	M 30 x 2 x 273 - 8.8 / SW 46	03.340.15.48.0	M 30 x 2 x 273 - 8.8 / SW 46
1165	Washer		02.5401.31.01	A 31	02.5401.31.01	A 31
1168	Lock nut		03.260.15.02.0	M 30 x 2 / SW 46	03.260.15.02.0	M 30 x 2 / SW 46
1175	Bush		03.113.94.10.0	Ø 41 / 50 x 23	03.113.94.10.0	Ø 41 / 50 x 23
1180	Graduated bush		03.113.01.47.0	Ø 30 / 40 / 62 x 31	03.113.01.47.0	Ø 30 / 40 / 62 x 31
1200	Air bag assembly incl. Item 1205 - 1224, 1240		05.429.43.21.0	see Chap. 4	05.429.43.22.0	see Chap. 4
1224	Locking screw		02.5070.95.00	M 16 x 65	02.5070.95.00	M 16 x 65
1225	Hexagon screw		02.5026.35.12	M 16 x 45 - 10.9	02.5026.35.12	M 16 x 45 - 10.9
1510	Hanger bracket incl. Item 1535		05.375.69.15.0		05.375.69.16.0	
1600	Support		03.005.71.97.3		03.005.71.97.3	
1605	Tube		03.310.74.22.0	Ø 35 / 51 x 112	03.310.74.22.0	Ø 35 / 51 x 112
1610	Supporting arm		03.195.00.96.0	L = 720 mm	03.195.00.96.0	L = 720 mm
1615	Support		05.189.13.19.0	146 x 176	05.189.13.19.0	146 x 176
1635	Bump stop		02.3506.02.00	Ø 80 / M 12	02.3506.02.00	Ø 80 / M 12

12 BPW ECO Air COMPACT running gear systems

12.1 Spare parts

AC

Spare parts for ECO Air COMPACT running gear systems

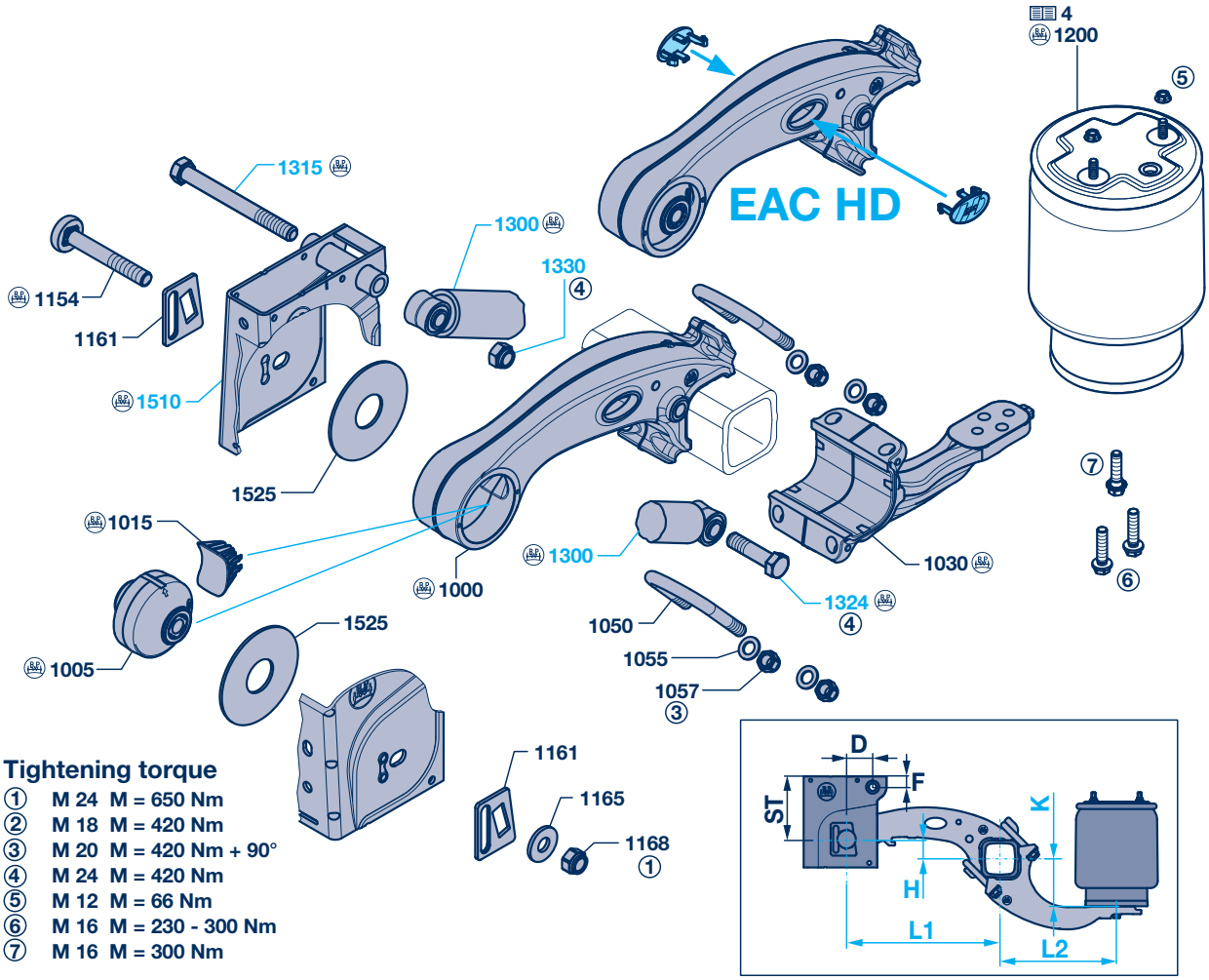

Tightening torque

1. M 24 M = 650 Nm
2. M 18 M = 420 Nm
3. M 20 M = 420 Nm + 90°
4. M 24 M = 420 Nm
5. M 12 M = 66 Nm
6. M 16 M = 230 - 300 Nm
7. M 16 M = 300 Nm

Spring pivot bolt bearing with spring bolt for screwed-on braces

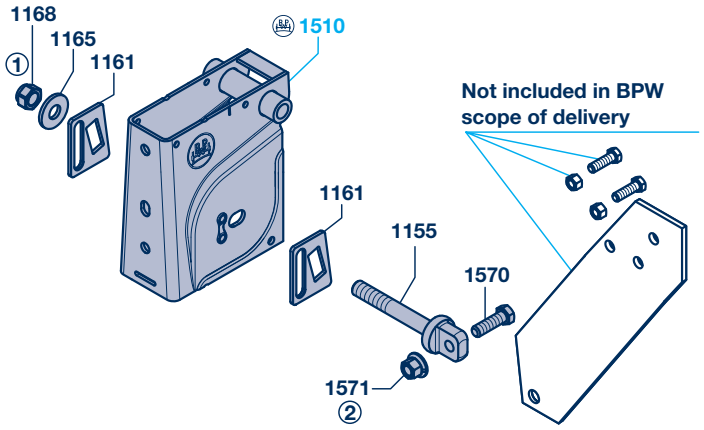

Hanger bracket with welding lugs for gusset plates

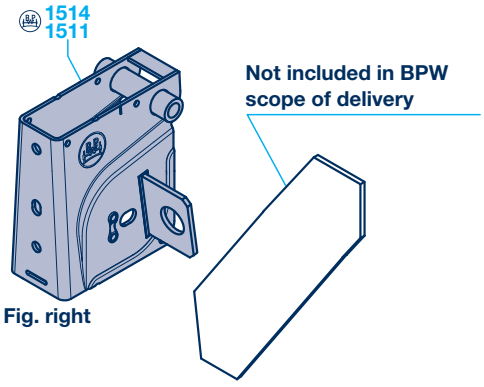

BPW ECO Air COMPACT running gear systems 12

Spare parts 12.1

Spare parts for ECO Air COMPACT running gear systems

Item	Designation	Dimension		BPW code no.:	Qty. / Axle	ACAU	ACAM	ACAO	ACBU	ACBM	ACBO
1000	Trailing arm incl. item 1004	L1 = 500 / H = 60 mm		05.244.20.06.0	2	◎	◎	◎			
			HD	05.244.20.10.0	2	◎	◎	◎			
		L1 = 500 / H = 130 mm		05.244.20.07.0	2				◎	◎	◎
			HD	05.244.20.12.0	2				◎	◎	◎
1004	Repair kit bush for trailing arm Item 1005 + 1015			**09.801.08.20.0**	2			◎			
1005	Bush [1]	Ø 24 / 43 / 59 / 132 x 112		02.0314.38.00	2			◎			
1015	Plug [1]	60 x 83.5 x 44		03.379.00.39.0	2			◎			
[1] only available as kit (09.801.08.20.0)											
1030	Airbag beam	L2 = 380 mm, K = 155 mm		03.244.20.02.0	2	◎			◎		
			HD	03.244.20.13.0	2	◎			◎		
		L2 = 380 mm, K = 85 mm		03.244.20.03.0	2		◎			◎	
			HD	03.244.20.14.0	2		◎			◎	
		L2 = 380 mm, K = -10 mm		03.244.20.04.0	2			◎			◎
			HD	03.244.20.15.0	2			◎			◎
		L2 = 335 mm, K = -10 mm	HD	03.244.20.08.0	2			◎			◎
1049	Repair kit spring seat arrangement Item 1050, 1055, 1057			**09.801.08.14.0**	2			◎			
1050	Spring U-bolt [2]	M 20 / 120 x 140		03.138.32.16.0	4			◎			
1055	Washer	A 21		02.5401.21.10	8			◎			
1057	Lock nut	M 20 - 10 / SW 30		03.260.04.21.0	8			◎			
[2] only available as kit (09.801.08.14.0)											
	Standard spring pivot bolt bearing										
1150	Repair kit spring pivot bolt bearing Item 1004, 1154 - 1168, 1525			**09.801.08.12.0**	2			◎			
1154	Screw (spring bolt)	M 24 x 171 / Ø 56		03.340.14.33.0	2			◎			
1161	Plate (adjusting plate)	107 x 85/70 x 6		03.281.34.12.0	4			◎			
1165	Washer	Ø 25 / 60 x 6		03.320.33.28.0	2			◎			
1168	Lock nut	M 24 / SW 36		03.260.14.13.0	2			◎			
1525	Washer (wearing plate)	Ø 59.1 / 170 x 4.5		03.320.38.29.0	4			◎			
	Spring pivot bolt bearing with spring bolt for screwed-on braces										
1155	Screw (spring bolt)	M 24 x 166 / Ø 56		03.340.14.24.0	2			◎			
1161	Plate (adjusting plate)	107 x 85/70 x 6		03.281.34.12.0	4			◎			
1165	Washer	Ø 25 / 60 x 6		03.320.33.28.0	2			◎			
1168	Lock nut	M 24 / SW 36		03.260.14.13.0	2			◎			
1525	Washer (wearing plate)	Ø 59.1 / 170 x 4.5		03.320.38.29.0	4			◎			
1570	Hexagon screw	M 18 x 1.5 x 60 - 10.9 / SW 27		02.5030.03.11	2			◎			
1571	Hexagon nut	M 18 x 1.5 / SW 27		05.260.53.07.0	2			◎			
1200	Air bag cpl.	see Chap. 4									

AC

12 BPW ECO Air COMPACT running gear systems

12.1 Spare parts

AC

Spare parts for ECO Air COMPACT running gear systems

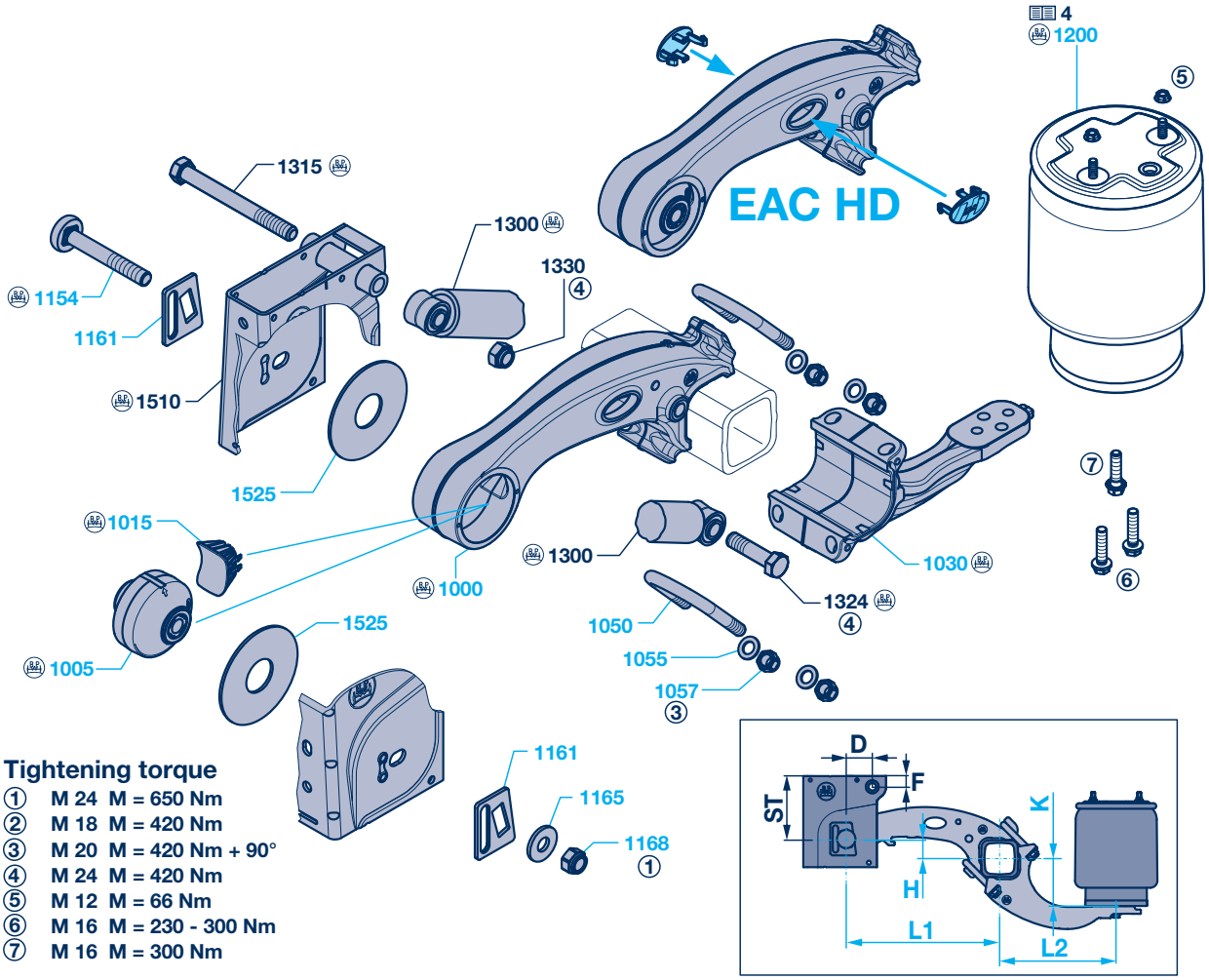

Tightening torque

1. M 24 M = 650 Nm
2. M 18 M = 420 Nm
3. M 20 M = 420 Nm + 90°
4. M 24 M = 420 Nm
5. M 12 M = 66 Nm
6. M 16 M = 230 - 300 Nm
7. M 16 M = 300 Nm

Spring pivot bolt bearing with spring bolt for screwed-on braces

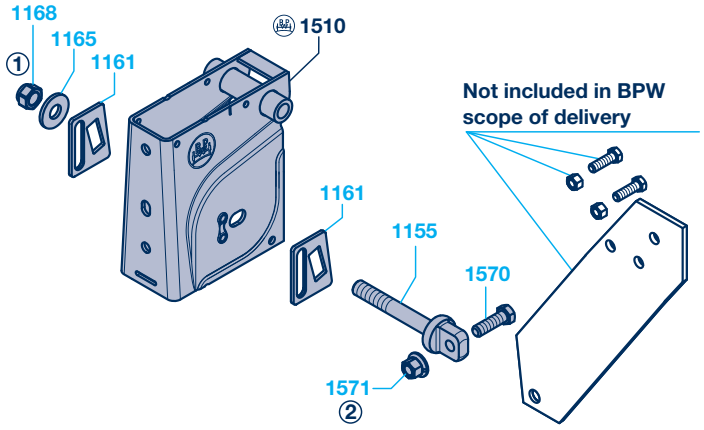

Hanger bracket with welding lugs for gusset plates

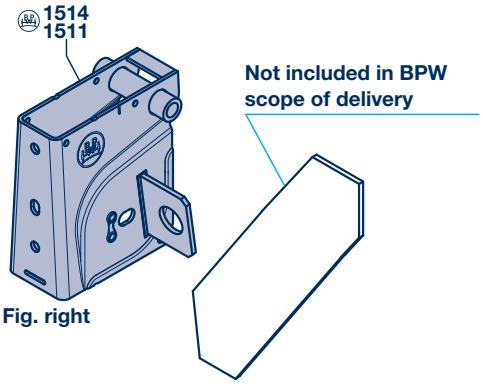

BPW ECO Air COMPACT running gear systems 12

Spare parts 12.1

Spare parts for ECO Air COMPACT running gear systems

Item	Designation	Dimension		BPW code no.:	Qty. / Axle	ACAU	ACAM	ACAO	ACBU	ACBM	ACBO
1300	Shock absorber incl. item 1302	Ø 65 / 75 mm, L min. 287 mm, L max. 412 mm, X = 204 mm	A	02.3722.79.02	2	◎	◎				
			B HD	02.3732.05.02	2	◎	◎				
		Ø 65 / 75 mm, L min. 292 mm, L max. 432 mm, X = 204 mm	A	02.3722.89.02	2	◎	◎	◎		◎	
			B HD	02.3732.07.02	2	◎	◎	◎		◎	
		Ø 65 / 75 mm, L min. 326 mm, L max. 496 mm, X = 235 mm	A	**02.3722.83.02**	2				◎	◎	◎
			B HD	02.3722.04.02	2				◎	◎	◎
		Ø 65 / 75 mm, L min. 351 mm, L max. 541 mm, X = 250 mm	A	02.3722.88.02	2						◎
			B HD	02.3732.06.02	2						◎
1302	Repair kit shock absorber mount Item 1303 + 1304			**09.801.08.18.0**	4			◎			
1303	Bush *	Ø 24 / 32 x 55		02.0314.39.00	4			◎			
1304	Rubber bush *	Ø 23 / 50 x 25		02.2805.10.00	4			◎			
* only available as kit (**09.801.08.18.0**)!											
1315	Hexagon screw	M 24 x 240 - 8.8 / SW 36		03.340.14.19.0	2			◎			
1323	Repair kit shock absorber attachment Item 1324			**09.801.08.11.0**	2			◎			
1324	Hexagon screw	M 24 x 83 - 8.8 / SW 36		03.340.14.37.0	2			◎			
1330	Lock nut	VM 24 - 10 / SW 36		02.5220.74.12	2			◎			
	Standard hanger bracket										
1510	Hanger brackets	Ø 24 / ST 205 / B 90 / D 85 F 35 / K 77.5 / L 270		05.375.50.01.0	2	◎	◎	◎	◎	◎	◎
		Ø 24 / ST 290 / B 90 / D 85 F 67 / K 77.5 / L 270		05.375.50.02.0	2	◎	◎				◎
	Hanger bracket with welding lug for gusset plates										
1511	Hanger bracket, left	Ø 24 / ST 205 / B 90 / D 85 F 35 / K 77.5 / L 270		05.375.50.03.0	1	◎	◎	◎	◎	◎	◎
		Ø 24 / ST 290 / B 90 / D 85 F 67 / K 77.5 / L 270		05.375.50.05.0	1	◎	◎				◎
1514	Hanger bracket, right	Ø 24 / ST 205 / B 90 / D 85 F 35 / K 77.5 / L 270		05.375.50.04.0	1	◎	◎	◎	◎	◎	◎
		Ø 24 / ST 290 / B 90 / D 85 F 67 / K 77.5 / L 270		05.375.50.06.0	1	◎	◎				◎

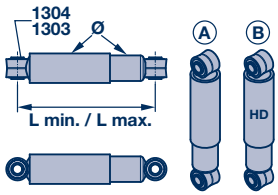

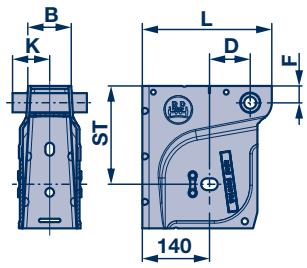

AC

12 BPW ECO Air COMPACT running gear systems

12.2 Two-sided axle lift, ECO Air COMPACT

AC

Two-sided axle lift, ECO Air COMPACT

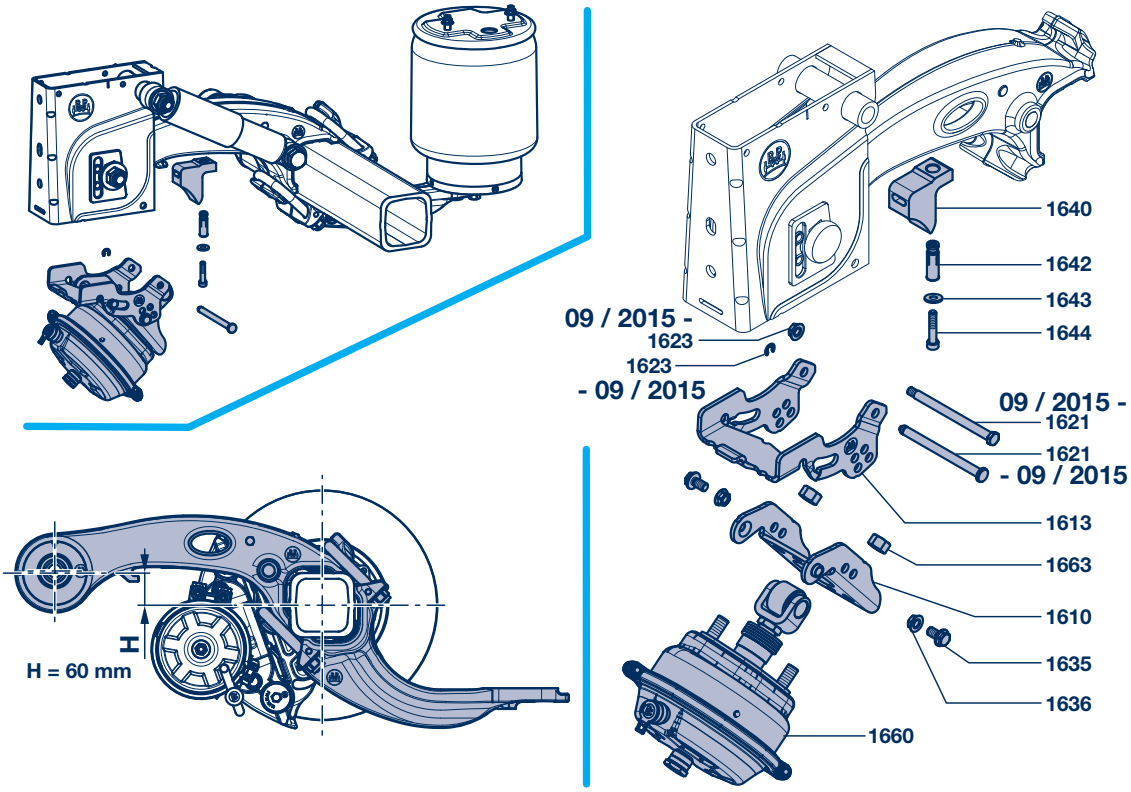

Item	Designation	Remark	BPW code no.:	Dimension		
			H = 60 mm		**H = 130 mm**	
1600	Two-sided axle lift cpl. Item 1610 - 1660		05.828.32.05.0	H = 60	05.828.32.06.0	H = 130
1610	Support		03.189.15.98.0			
1613	Shaped plate		03.165.46.62.0			
			- 09 / 2015			
1621	Bolt *		03.084.12.05.0	Ø 12 / Ø 20 x 155		
1623	Locking washer		02.5413.10.93			
			09 / 2015 -			
1621	Bolt		03.084.12.06.0	Ø 12 / M 10 x 163 / SW 16		
1623	Lock nut		02.5273.28.87	M 10		
1635	Locking screw		02.5071.59.11	M 12 x 22 / SW 17		
1636	Lock nut		02.5273.33.80	M 12 - 10 / SW 17		
1639	Repair kit formed part Item 1640 - 1644		**09.801.08.13.0**	for 1 axle side	**09.801.08.24.0**	for 1 axle side
1640	Shaped part		03.001.35.17.0	for H = 60	03.001.35.19.0	for H = 130
1642	Dowel		02.0130.87.10	M 10		
1643	Washer		02.5401.10.11	A 10		
1644	Cylinder cap screw		02.5015.27.82	M 10 x 50 / SW 8		
1660	Lift cylinder incl. item 1663		05.444.10.41.0			
1663	Hexagon nut		02.5202.21.80	M 16 x 1.5 / SW 24		

* Replaced by bolt with lock nut

BPW ECO Air COMPACT running gear systems 12

Sidewise mounted axle lift, ECO Air COMPACT 12.3

Sidewise mounted axle lift, ECO Air COMPACT

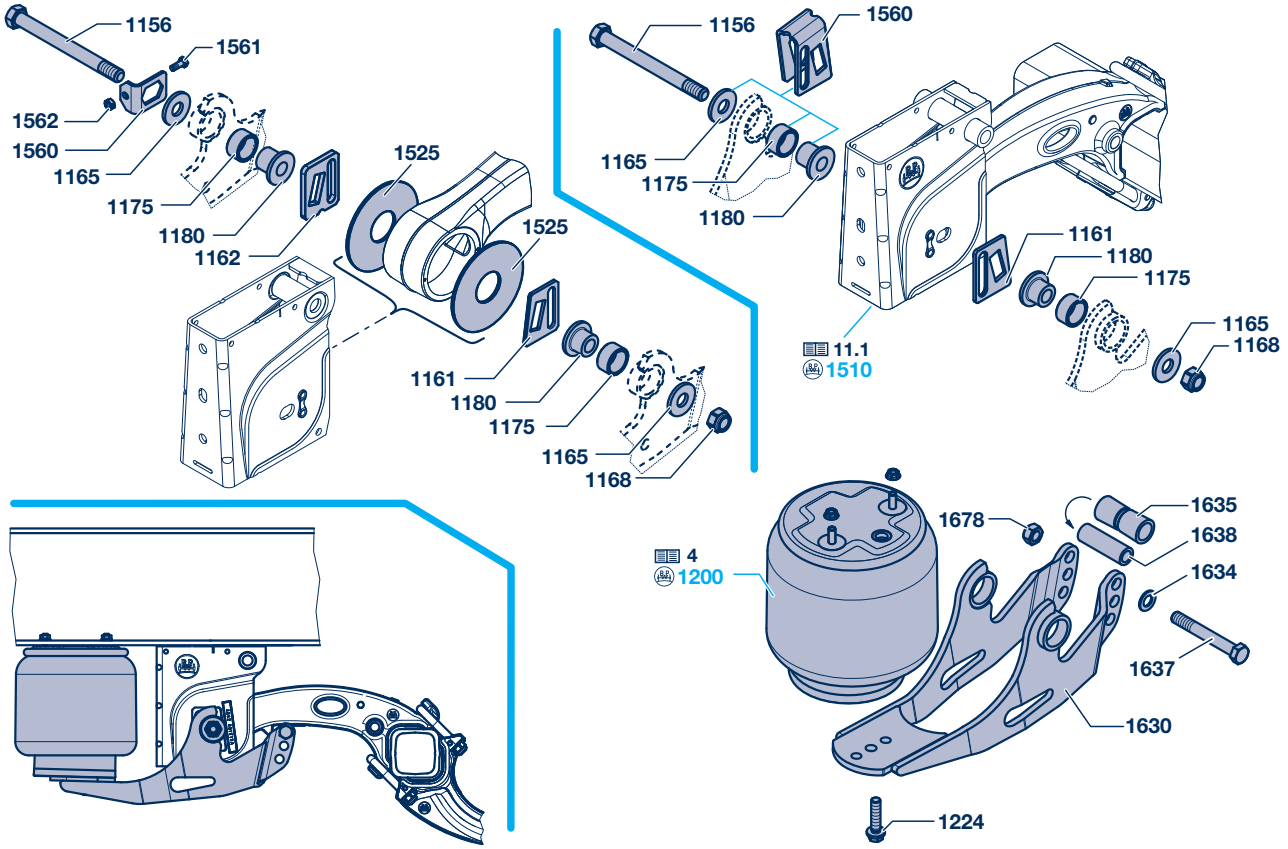

Item	Designation	Remark	BPW code no.:	Dimension	BPW code no.:	Dimension
	Axle lift device 1156 - 1640		05.828.32.07.0		05.828.32.25.0	
1156	Screw (spring bolt)		02.5030.63.13	M 24 x 2 x 250 / SW 36	02.5030.63.13	M 24 x 2 x 250 / SW 36
1161	Plate (adjusting plate)		03.281.34.12.0	107 x 85 / 70 x 6	03.281.34.12.0	107 x 85 / 70 x 6
1162	Plate (adjusting plate)				03.281.34.14.0	107 x 82 x 10
1165	Washer		03.320.33.28.0	Ø 25 / 60 x 6	03.320.33.28.0	Ø 25 / 60 x 6
1168	Lock nut		03.260.14.13.0	M 24 / SW 36	03.260.14.13.0	M 24 / SW 36
1175	Bush		03.112.45.13.0	Ø 40.5 / 50 x 26	03.112.45.13.0	Ø 40.5 / 50 x 26
1180	Graduated bush		03.113.00.54.0	Ø 24 / 40 / 62 x 33.5	03.113.00.54.0	Ø 24 / 40 / 62 x 33.5
1200	Air bag incl. item 1224		05.429.43.86.0	see Chap. 4	05.429.43.86.0	see Chap. 4
1224	Locking screw		02.5071.61.16	M 16 x 61	02.5071.61.16	M 16 x 61
1510	Hanger brackets		see Chap. 11.1		see Chap. 11.1	
1525	Wearing plate				03.320.38.29.0	Ø 59,1 / 170 x 4.5
1560	Adjusting plate with torsion protection		03.001.32.07.0		03.001.32.09.0	
1561	Hexagon screw				02.5025.61.82	M 10 x 25 / SW 16
1562	Lock nut				02.5273.10.82	M 10 / SW 17
1630	Lifting arm		05.189.15.99.0		05.189.16.75.0	
1634	Washer				02.5401.21.04	Ø 21
1635	Bush		03.112.43.13.0	Ø 32 / 41 x 98	03.112.43.13.0	Ø 32 / 41 x 98
1637	Hexagon screw		02.5023.14.80	M 20 x 150	02.5023.14.80	M 20 x 150
1638	Tube		03.300.73.54.0	Ø 21 / 31 x 100	03.300.73.54.0	Ø 21 / 31 x 100
1678	Lock nut		02.5220.50.82	M 20	03.260.03.12.0	M 20 / SW 30

12 BPW ECO Air COMPACT running gear systems

12.4 Central axle lift device, ECO Air COMPACT

AC

Central axle lift device, ECO Air COMPACT

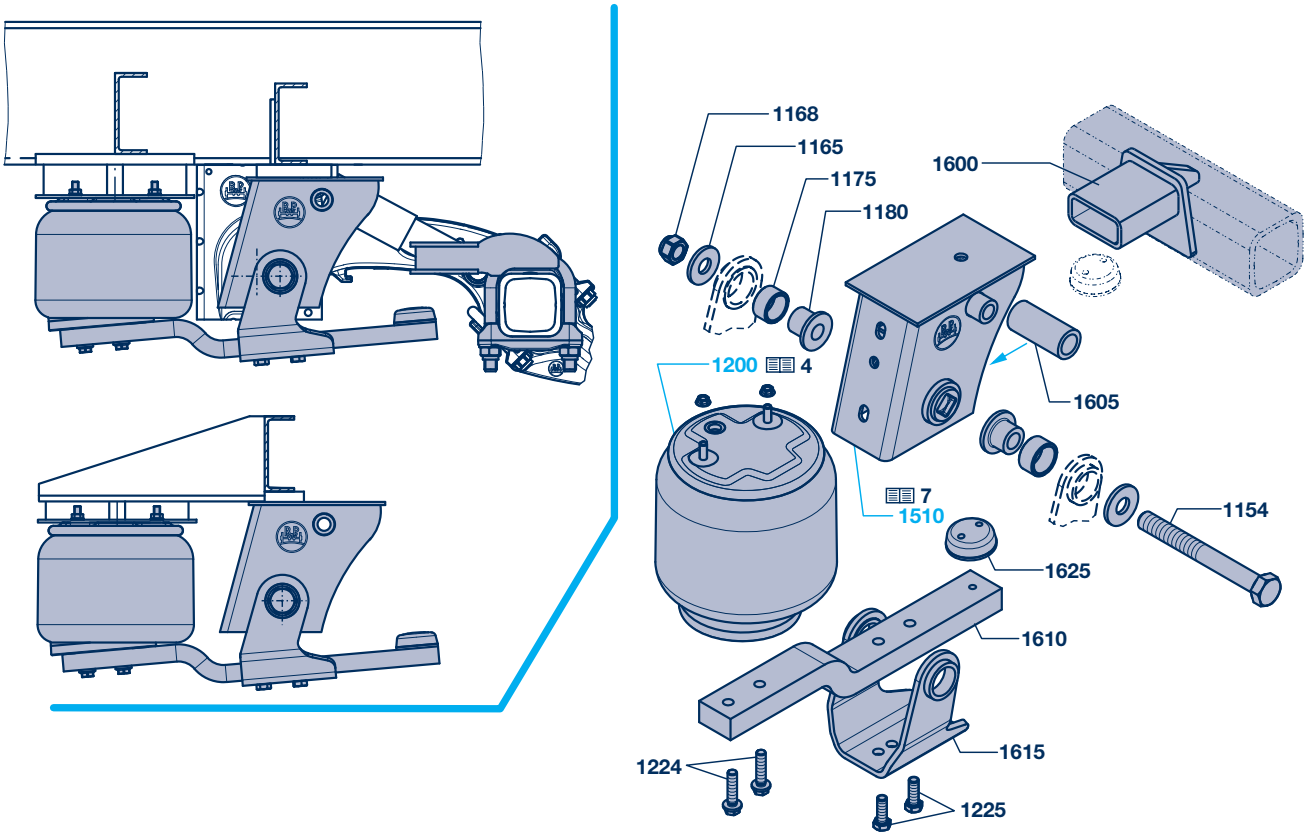

Item	Designation	Remark	BPW code no.:	Dimension
1154	Screw (spring bolt)		03.340.15.37.0 *	M 30 x 265 / SW 46
			03.340.15.46.0 03.340.15.48.0	M 30 x 2 x 265 / SW 46 M 30 x 2 x 273 / SW 46
1165	Washer		02.5401.31.01	A 31 / 125
1168	Lock nut		03.260.15.01.0 *	M 30 / SW 46
			03.260.15.02.0	M 30 x 2 / SW 46
1175	Bush		03.113.94.10.0	Ø 41 / 50 x 23
1180	Graduated bush		03.113.01.47.0	Ø 30 / 40 / 62 x 31
1200	Air bag incl. item 1224		see Chap. 4	
1224	Locking screw		02.5070.95.00	M 16 x 65
1225	Hexagon screw		02.5026.35.12	M 16 x 45 - 10.9
1510	Hanger brackets		see Chap. 7	
1600	Support		05.189.10.31.0	
1605	Tube		03.310.74.22.0	Ø 35 / 51 x 112
1610	Lifting arm		03.195.00.96.0	L = 720 mm
1615	Support		05.189.13.19.0	146 x 176
1625	Bumper		02.3506.02.00	Ø 80 / M 12

*** Important: Always change the lock nuts in case of replacement!**
Spring bolt and lock nuts are successively being converted to fine thread.
Spring bolt 03.340.15.46.0 or 03.340.15.48.0 Replacement for 03.340.15.37.0 (M 30 x 265 / SW 46)

Lock nut 03.260.15.02.0 Replacement for 03.260.15.01.0

Notes

BPW-EL-Luft 31052101e

BPW ist ein weltweit führender Hersteller von intelligenten Fahrwerksystemen für Anhänger und Auflieger. Von der Achse über Federung und Bremse bis hin zu anwenderfreundlichen Telematikanwendungen bieten wir als Mobilitätspartner und Systempartner Lösungen für die Transportindustrie aus einer Hand.
Damit schaffen wir höchste Transparenz in Verlade- und Transportprozessen und ermöglichen ein effizientes Flottenmanagement. Hinter der traditionsbewussten Marke für Trailerachsen steckt heute eine internationale Unternehmensgruppe mit einem breiten Produkt- und Dienstleistungsportfolio für die Nutzfahrzeugindustrie. Mit Fahrwerksystemen, Telematik, Beleuchtungssystemen, Kunststofftechnologie und Aufbautentechnik ist BPW der Systempartner für Fahrzeughersteller.

Dabei verfolgt BPW als inhabergeführtes Unternehmen konsequent ein Ziel: Ihnen immer genau die Lösung zu bieten, die sich am Ende für Sie auszahlt. Dafür setzen wir auf kompromisslose Qualität für hohe Zuverlässigkeit und Lebensdauer, gewichts- und zeitsparende Konzepte für geringere Betriebs- und Wartungskosten sowie persönlichen Kundendienst und ein dichtes Servicenetz für schnelle und direkte Unterstützung. So können Sie sicher sein, mit Ihrem Mobilitätspartner BPW immer den wirtschaftlichen Weg zu gehen.

Your partner on the way to economic viability!

BPW Bergische Achsen Kommanditgesellschaft
Postbox 12 80 · 51656 Wiehl, Germany · Phone +49 (0) 2262 78-0
info@bpw.de · **www.bpw.de**